CONTRACT NO. B-20757

D 20757 PART 1 OF 2

INDIANA DEPARTMENT OF TRANSPORTATION

BRIDGE PLANS

FOR SPANS OVER 20 FEET ON STATE ROAD NO. 23

PROJECT NO. DSBN-206-6(015)

BRIDGES OVER 20' SPAN

FEDERAL REGION NO.	STATE	PROJECT NO.	FISCAL YEAR	SHEET NO.	TOTAL SHEETS
5	IND.	DSBN-206-6(015)	199	1	131

INDEX

PROJECT	STRUCTURE	TYPE	SPAN	OVER	STATION
DSBN-206-6(015)	23-71-4992B	PRESTRESSED I-BEAM & SIMPLE COMP STEEL BEAM	30'-6, 81'-0, & 30'-6	U.S. 33	
	23-71-4993B	CONT. STEEL GIRDER & SIMPLE R.C. GIRDER	114'-9, 2 @ 147'-9, 114'-9 & 3 @ 29'-9	SAINT JOSEPH RIVER	
	23-71-4994B	PRESTRESSED CONCRETE I-BEAM	40'-9$\frac{9}{16}$, 66'-8, 33'-1	MISHAWAKA AVE.	

SHEET NO.	SHEET DESIGNATION	SUBJECT	F.H.W.A. APPROVAL
1		TITLE AND INDEX SHEET	
2-5		TRAFFIC MAINTENANCE DETAILS	
6	D1	GENERAL NOTES, MATERIAL NOTES AND STANDARD DRAWING TABLE	
		STRUCTURE NO. 23-71-4992B	
7-8	D2-D3	GENERAL PLAN, SECTIONS	
9-16	D4-D11	END BENT DETAILS	
17-26	D12-D21	INTERIOR BENT DETAILS	
27-28	D22-D23	STEEL DETAILS	
29	D24	PRESTRESSED CONCRETE I-BEAM DETAILS	
30-32	D27-D27	FLOOR DETAILS	
33-34	D28-D29	CONCRETE RAILING DETAILS	
35-37	D30-~~D32~~ D31	R.C. APPROACH SLAB DETAILS	
38-39	D32~~D33~~-D34	SIGNING DETAILS	
		STRUCTURE NO. 23-71-4993B	
~~40~~ 40A-H	~~D35~~ D35A-H	GENERAL PLAN, SECTIONS, SUBSTRUCTURE DETAILS AND CONC. I-BEAM DET.	
41-~~45~~ 45A	D36-~~D40~~ D40A	FLOOR DETAILS	
46-52	D41-D47	RAILING DETAILS	
53-54 54A	D48-D49 D49A	R.C. APPROACH SLAB DETAILS	
55-61	D50-D56	CATHODIC PROTECTION DETAILS	
		STRUCTURE NO. 23-71-4994B	
62	D57	COPING OFFSETS AND TIE UP DIAGRAMS	
63-64	D58-D59	GENERAL PLAN, SECTIONS	
67-67	D62-D62	END BENT DETAILS	
68-72	D63-D67	INTERIOR BENT DETAILS	
73-74	D68-D69	PRESTRESSED CONCRETE I-BEAM DETAILS	
75-77	D70-D72	FLOOR DETAILS	
78-79	D73-D74	SCREEDS	
80-81	D75-D76	CONCRETE RAILING DETAILS	
82-83	D77-D78	R.C. APPROACH SLAB DETAILS	
84-85	D79-D80	MISCELLANEOUS DETAILS	
86-90	D81-D85	MISCELLANEOUS DETAILS	

STRUCTURE NO. 23-71-4992B ON STATE ROAD 23 OVER U.S. ROUTE 33
IN ST. JOSEPH COUNTY ,RANGE 2 EAST, TOWNSHIP 37 NORTH, CITY OF
SOUTH BEND, INDIANA.
AT RP 39+64

STRUCTURE NO. 23-71-4993B ON STATE ROAD 23 OVER SAINT JOSEPH RIVER
IN ST. JOSEPH COUNTY ,RANGE 2 EAST, TOWNSHIP 37 NORTH, CITY OF
SOUTH BEND, INDIANA.
AT RP 39+73

STRUCTURE NO. 23-71-4994B ON STATE ROAD 23 OVER MISHAWAKA AVENUE
IN ST. JOSEPH COUNTY ,RANGE 2 EAST, TOWNSHIP 37 NORTH, CITY OF
SOUTH BEND, INDIANA.
AT RP 39+83

CITY OF SOUTH BEND
ST. JOSEPH COUNTY

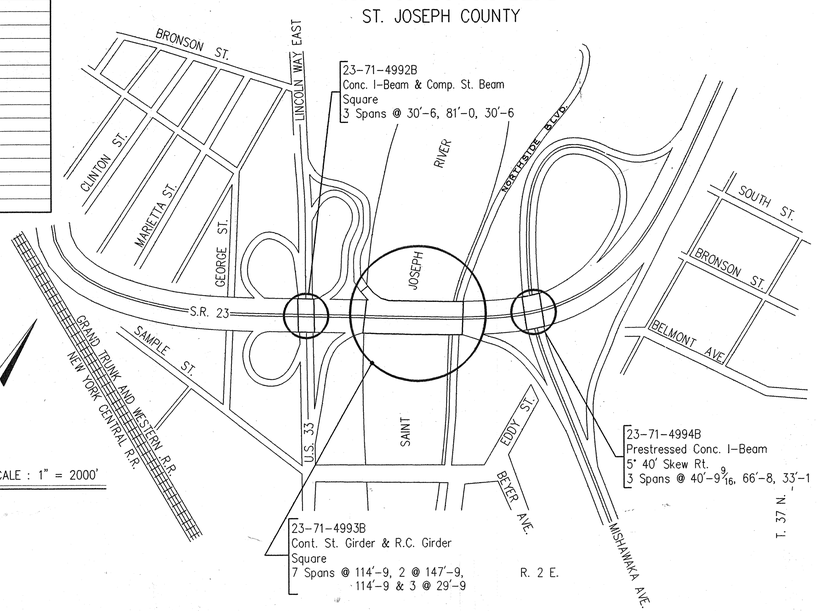

TRAFFIC DATA		
A.D.T. (1991)		24,100 V.P.D.
A.D.T. (19 PROJECTED)		V.P.D.
D.H.V. (19 PROJECTED)		V.P.D.
TRUCKS		D.H.V. % A.D.T. %
POSTED SPEED		35 M.P.H.
ACCESS CONTROL		
FUNCTIONAL CLASSIFICATION		URBAN ARTERIAL

THESE PLANS PREPARED BY:
FINK ROBERTS & PETRIE, INC.
FRP
Structural Engineering • Civil Engineering • Industrial Buildings • Surveying
3307 West 96th Street
Indianapolis, Indiana 46268
317-872-8400 Tele 317-876-2408 Fax

DATE: March 29, 1993

CERTIFIED BY: David T. Lash

DAVID T. LASH REGISTERED No. 20470 STATE OF INDIANA PROFESSIONAL ENGINEER

INDIANA DEPARTMENT OF HIGHWAYS
STANDARD SPECIFICATIONS DATED 1988
TO BE USED WITH THESE PLANS.

REVISIONS	
DATE	SHEET NO.
10/21/93	1-4,8,9,11,13,15,17-19,21,23,25,27,44,64-66,68,69,71
6/8/94	1,44 DEL. 40,45,48,51,54 INSERT:40A,45A,48A,51A,54A ADDED:40B-H AND 44A-C
7/25/94	DELETE 51A INSERT 51B

REVISIONS	
DATE	SHEET NO.

INDEX CONTINUED
STANDARD DRAWINGS

SHEET NO.	SHEET DESIGNATION	SUBJECT	F.H.W.A. APPROVAL	ADOPTED "A" REVISION "R"
91	BRIDGE STD. BR1	CONCRETE RAILING TRANSITION TYPE TGB	PENDING	A AUG. 1992
92	BRIDGE STD. BR1A	ALUMINUM BRIDGE RAILING DETAILS	PENDING	A AUG. 1992
93	BRIDGE STD. BR2	STEEL BRIDGE RAILING	PENDING	A AUG. 1992
94	BRIDGE STD. BR2A	STEEL BRIDGE RAILING DETAILS	PENDING	A AUG. 1992
	BRIDGE STD. BR5	RAILING CONNECTION DETAILS		
	BRIDGE STD.			
95	BRIDGE STD. C1	MISCELLANEOUS DETAILS	PENDING	A DEC. 1992
	BRIDGE STD. C2	MISCELLANEOUS DETAILS		
96	BRIDGE STD. C3	MISCELLANEOUS DETAILS	PENDING	A NOV. 1992
	BRIDGE STD. C4	MISCELLANEOUS DETAILS		
	BRIDGE STD. D	CASTING DETAILS ROADWAY DRAINS		
	BRIDGE STD. D1	ADJUSTING FRAME DETAILS FOR ROADWAY DRAINS		
	BRIDGE STD.			
97	BRIDGE STD. PB1	PRESTRESSED CONCRETE TYPE I I-BEAMS	4-16-62	A JAN. 1962
98	BRIDGE STD. PB2	PRESTRESSED CONCRETE TYPE I-BEAMS	4-16-62	A JAN. 1962
	BRIDGE STD. PB6	PRESTRESSED BOX BEAMS		
	BRIDGE STD. PB	PRESTRESSED COMPOSITE BOX BEAMS WIDE		
	BRIDGE STD. PB	PRESTRESSED COMPOSITE BOX BEAMS WIDE		
99	BRIDGE STD. PB10	TOLERANCES FOR FABRICATION OF PRESTRESSED BEAMS	8-14-63	A NOV. 1962
100	BRIDGE STD. PB11	ELASTOMERIC BEARING PAD DETAILS	2-03-87	R 2-02-87
	BRIDGE STD.			
	BRIDGE STD.			
	BRIDGE STD. R2A	BRIDGE LIGHTING DETAILS		
101	BRIDGE STD. R2B	BRIDGE LIGHTING DETAILS	5-19-88	R 4-04-88
	BRIDGE STD. S1	MISCELLANEOUS DETAILS		
102	BRIDGE STD. SH1	STEEL SHOE DETAILS	2-01-85	R 10-29-84
	BRIDGE STD. T SHEET A	STANDARD TEMPORARY BRIDGE		
	BRIDGE STD. T SHEET B	STANDARD TEMPORARY BRIDGE		
103	BRIDGE STD. SS-1	EXPANSION JOINT S-S	6-20-91	A APR. 1991
104	BRIDGE STD. SS-2	EXPANSION JOINT S-S	6-20-91	A APR. 1991
	BRIDGE STD.			
	BRIDGE STD.			
	BRIDGE STD.			
	ROAD STD. SHEET A	STANDARD PAVEMENT JOINTS		
	ROAD STD. SHEET B	STANDARD PAVEMENT JOINTS		
105	ROAD STD. SHEET MB2	MISCELLANEOUS STANDARDS	5-21-82	R 4-01-82
106	ROAD STD. SHEET MC	MISCELLANEOUS STANDARDS	1-11-89	R 9-01-88
107	ROAD STD. SHEET MD	MISCELLANEOUS STANDARDS	12-27-82	R 10-01-82
108	ROAD STD. SHEET ME	MISCELLANEOUS STANDARDS	5-19-88	R 4-04-88
109	ROAD STD. SHEET MT1	MISCELLANEOUS STANDARDS	PENDING	R 5-01-89
110	ROAD STD. SHEET MT1A	MISCELLANEOUS STANDARDS	8-05-88	R 8-01-88
111	ROAD STD. SHEET MT3	MISCELLANEOUS STANDARDS	8-05-88	R 8-01-88
112	ROAD STD. SHEET MT6C	MISCELLANEOUS STANDARDS	12-01-88	R 9-01-88
113	ROAD STD. SHEET MT6G	MISCELLANEOUS STANDARDS	8-05-88	A AUG. 1988
114	ROAD STD. SHEET MT9	MISCELLANEOUS STANDARDS	8-05-88	A AUG. 1988
115	ROAD STD. SHEET MT9A	MISCELLANEOUS STANDARDS	8-05-88	A AUG. 1988
	ROAD STD. SHEET	MISCELLANEOUS STANDARDS		
	ROAD STD. SHEET	MISCELLANEOUS STANDARDS		
	ROAD STD. SHEET	MISCELLANEOUS STANDARDS		
	ROAD STD. SHEET	MISCELLANEOUS STANDARDS		
	ROAD STD. SHEET	MISCELLANEOUS STANDARDS		
	ROAD STD. SHEET	MISCELLANEOUS STANDARDS		
	ROAD STD. SHEET	MISCELLANEOUS STANDARDS		
	ROAD STD. SHEET	MISCELLANEOUS STANDARDS		
	ROAD STD. SHEET	MISCELLANEOUS STANDARDS		
	ROAD STD. SHEET	MISCELLANEOUS STANDARDS		
	ROAD STD. SHEET	MISCELLANEOUS STANDARDS		
116	ROAD STD. SHEET G-1	W-BEAM GUARDRAIL COMPONENTS	PENDING	A AUG. 1992
117	ROAD STD. SHEET G-2	THRIE-BEAM GUARDRAIL COMPONENTS	7-20-92	A DEC. 1991
118	ROAD STD. SHEET G-3	W-BEAM GUARDRAIL ASSEMBLIES	7-20-92	A DEC. 1991
119	ROAD STD. SHEET T-1	GUARDRAIL TRANSITION TYPE GB	PENDING	A AUG. 1992
120	ROAD STD. SHEET T-1A	GUARDRAIL TRANSITION TYPE GP	PENDING	A AUG. 1992
	ROAD STD. SHEET T-3	GUARDRAIL TRANSITION TYPE VH		
	ROAD STD. SHEET T-4	PIER CONNECTION DETAILS		
121	ROAD STD. SHEET E-1	GUARDRAIL END TREATMENT TYPE I	7-20-92	A DEC. 1991
	ROAD STD. SHEET E-2	GUARDRAIL END TREATMENT TYPE OS		
	ROAD STD. SHEET E-3	GUARDRAIL END TREATMENT TYPE MS		
122	ROAD STD. SHEET B-1	TYPICAL BRIDGE APPROACH GUARDRAIL	PENDING	A AUG. 1992
	ROAD STD. SHEET GR10B	W-BEAM GUARD RAIL TERMINAL SECTION		
123	ROAD STD. SHEET CB1	CONCRETE MEDIAN BARRIER	1-11-89	R 9-01-88
124	ROAD STD. SHEET CB2	TEMPORARY CONCRETE BARRIER	1-11-89	R 9-01-88
	ROAD STD. SHEET 1 DETOURS	STANDARD DETOUR SIGNS		
	ROAD STD. SHEET 1A DETOURS	STANDARD DETOUR SIGNS		
125	ROAD STD. SHEET 1B DETOURS	STANDARD DETOUR SIGNS	PENDING	A SEP. 1988
126	ROAD STD. SHEET 2 DETOURS	STANDARD DETOUR SIGNS	6-20-91	R 4-01-91
127	ROAD STD. SHEET 2A DETOURS	STANDARD DETOUR SIGNS	PENDING	A SEP. 1988
128	ROAD STD. SHEET 3 DETOURS	STANDARD DETOUR SIGNS	PENDING	R 9-01-88
129	ROAD STD. SHEET 3A DETOURS	STANDARD DETOUR SIGNS	PENDING	R 9-01-88
130	ROAD STD. SHEET 4 DETOURS	STANDARD DETOUR SIGNS	1-11-89	R 9-01-88
131	ROAD STD. SHEET 5 DETOURS	STANDARD DETOUR SIGNS	PENDING	R 9-01-88
	ROAD STD. SHEET 5A DETOURS	STANDARD DETOUR SIGNS		

APPROVED 4.12.93
CHIEF, DIVISION OF DESIGN, INDIANA DEPARTMENT OF HIGHWAYS

NOTE:
WHENEVER ST/206-6( )
APPEARS ON THESE PLANS OR CONTRACT DOCUMENTS
IT SHALL BE INTERPRETED AS DSBN-206-6(015)

FEDERAL HIGHWAY ADMINISTRATION
DEPARTMENT OF TRANSPORTATION
APPROVED:-
DIVISION ADMINISTRATOR DATE

BRIDGE FILE:- 23-71-4992B, 23-71-4993B, 23-71-4994B

Des. Nos. 8916550, 9116551, 9116552

C:\20BR\4993\ 4993TITL OPER: twl TERM:0166 3/25/1993 8:36:47

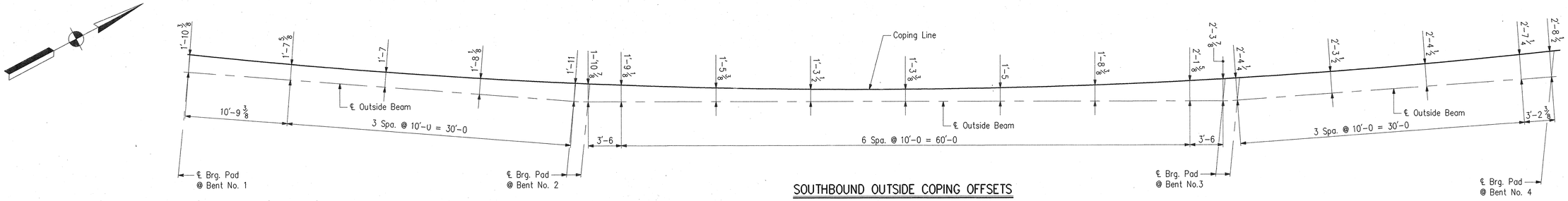

SOUTHBOUND OUTSIDE COPING OFFSETS

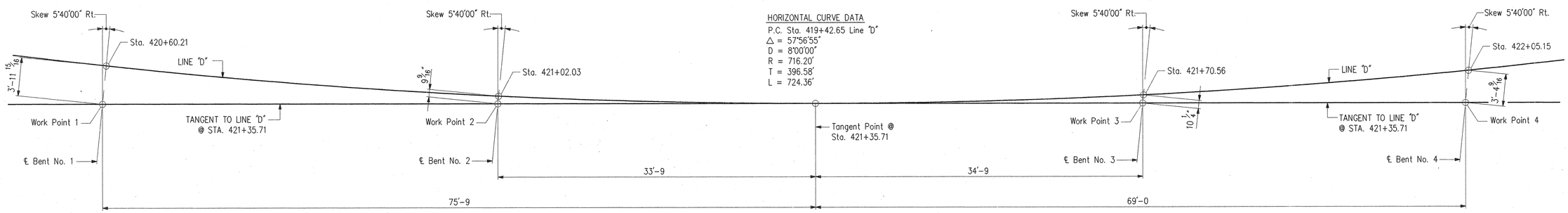

HORIZONTAL CURVE DATA
P.C. Sta. 419+42.65 Line "D"
Δ = 57°56'55"
D = 8°00'00"
R = 716.20'
T = 396.58'
L = 724.36'

TIE-UP DIAGRAM

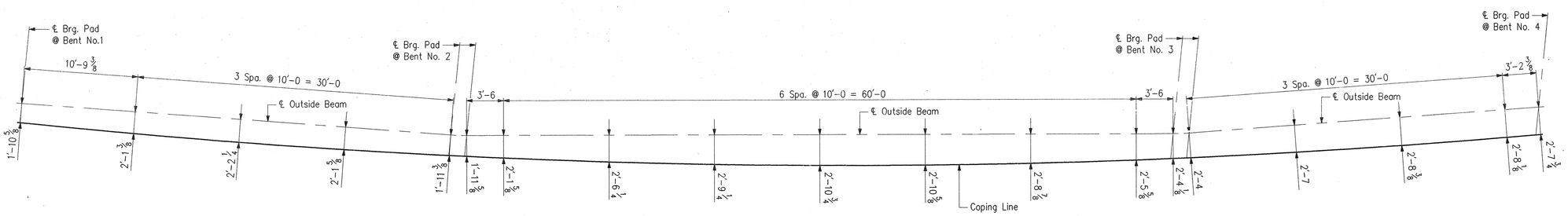

NORTHBOUND OUTSIDE COPING OFFSETS

NOTES:

- All Coping Offsets are perpendicular to the centerline of the Beam and spacing is along the centerline of the Beam.

COPING OFFSETS AND TIE-UP DIAGRAM

INDIANA DEPARTMENT OF TRANSPORTATION

ST. JOSEPH COUNTY

SCALE:- 3/16" = 1'-0 DATE:- March 29, 1993

David T. Lash

DRAWING:- D57 OF 90 SHEET:- 62 OF 131

PROJECT:- ST/206-66( ) STATION:-

BRIDGE CONTRACT NO. B-20757

BRIDGE FILE:- 23-71-4994B

DAVID T. LASH REGISTERED No. 20470 STATE OF INDIANA PROFESSIONAL ENGINEER

DESIGNED	DPJ	C'K'D	DDC
DRAWN	AJW	C'K'D	DDC
TRACED		C'K'D	

D:\SR23\4994B\ 4994TIE OPER: aj TERM:0122 1/13/1993 12:16:29

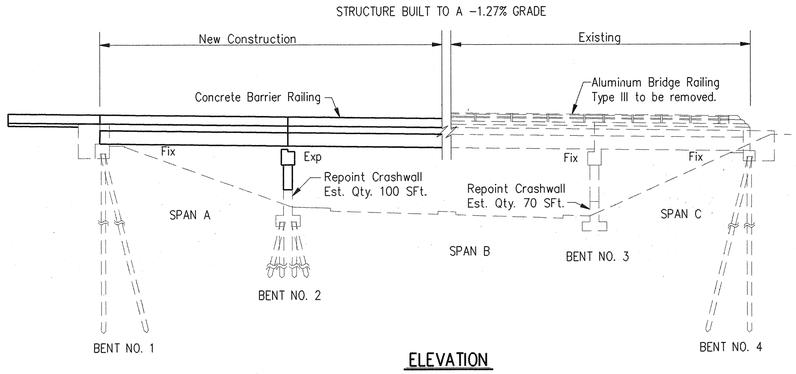

ELEVATION

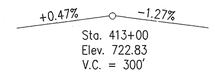

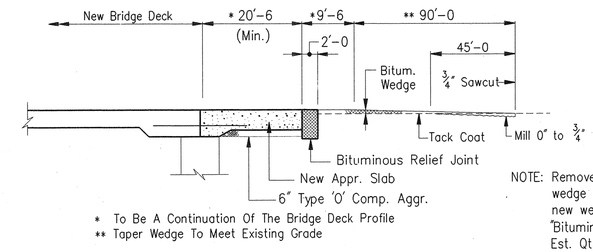

* To Be A Continuation Of The Bridge Deck Profile
** Taper Wedge To Meet Existing Grade

NOTE: Remove existing bituminous wedge prior to constructing new wedge. Pay for as "Bituminous, Surface, Remove." Est. Qty. 832 Sys. (Included in the quantities for -4994B)

HALF LONGITUDINAL SECTION - NORTH END

No Scale

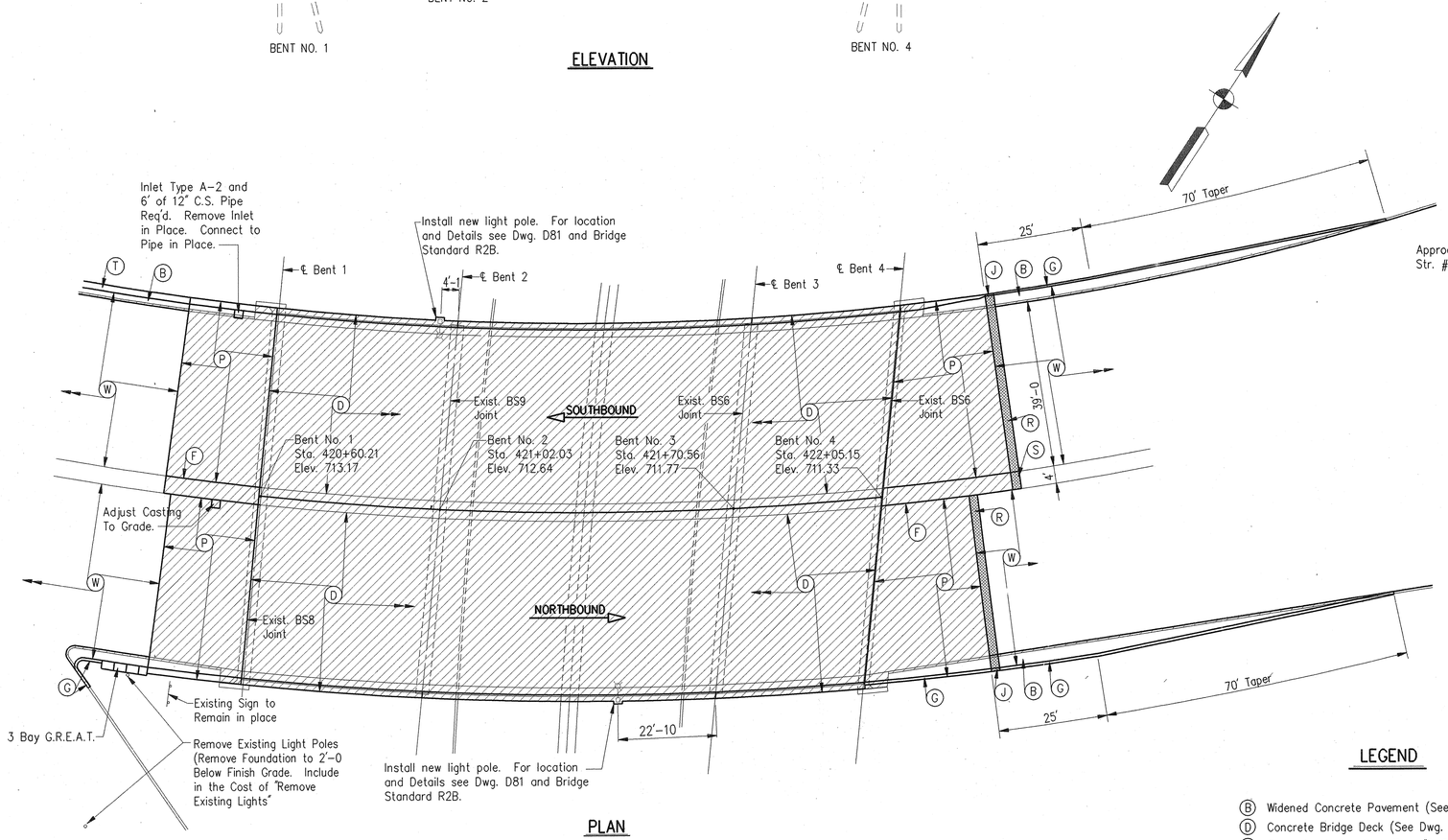

PLAN

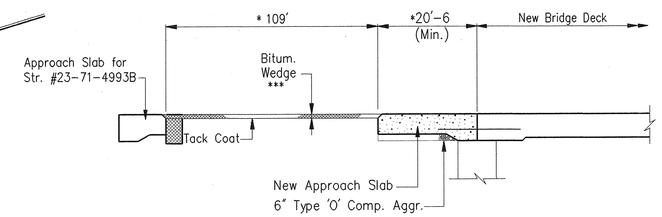

* To Be A Continuation Of The Bridge Deck Profile
*** See Dwg. D35 for treatment of existing bituminous wedge

HALF LONGITUDINAL SECTION - SOUTH END

No Scale

NOTES:

- For Guardrail Information See Dwg. D79.
- For Pavement Striping See Dwg. D79.

LEGEND

- (B) Widened Concrete Pavement (See Dwg. D80)
- (D) Concrete Bridge Deck (See Dwg. D70-D72)
- (F) Concrete Median Curb Type "C-8" (See Rd. Std. ME)
- (G) Integral Concrete Curb, Type "C" (See Rd. Std. ME)
- (J) Special Bituminous Curb (For Details, See Dwg. D80.)
- (P) 10" R.C. Pavement (for Details see Dwg. D77-D80)
- (R) Bituminous Relief Joint (see Mat'l. Notes, Dwg. D1.)
- (S) Special Bituminous Center Curb (For Details see Dwg. D80.)
- (T) Concrete Railing on Footing. (For Details see Dwg. D47.)
- (W) Bituminous Wedge (see Mat'l. Notes, Dwg. D1.)
- Indicates Concrete Removals

DESIGN DATA

Live Load: HS20-44 Loading with Impact & Distribution Of Loads in Accordance with 1992 AASHTO Specifications.

Dead Load: Actual Weight (Includes Future Overlay)

Slab: Designed for 16,000 Lbs. Wheel Plus Impact

GENERAL PLAN

BRIDGE RECONSTRUCTION
PRESTRESSED CONCRETE I-BEAM BRIDGE
3 SPANS @ 40'-9 9/16, 66'-8, AND 33'-1 SKEW 5° 40' RT.
CLEAR RDWY. (RADIAL) 40'-8 CONC. BARRIER RAILING
S.R. 23 OVER MISHAWAKA AVENUE

INDIANA DEPARTMENT OF TRANSPORTATION

ST. JOSEPH COUNTY

SCALE:- Scale: 1/16" = 1'-0 Unless Otherwise Noted

DATE:- March 29, 1993

David T. Lash

DAVID T. LASH REGISTERED No. 20470 STATE OF INDIANA PROFESSIONAL ENGINEER

DRAWING D58 OF 85 SHEET 63 OF 131
PROJECT ST/206-6( ) STATION:-
BRIDGE CONTRACT NO. B-20757
BRIDGE FILE 23-71-4994B

DESIGNED	TWL	C'K'D	PEB
DRAWN	TWL	C'K'D	PEB
TRACED		C'K'D	

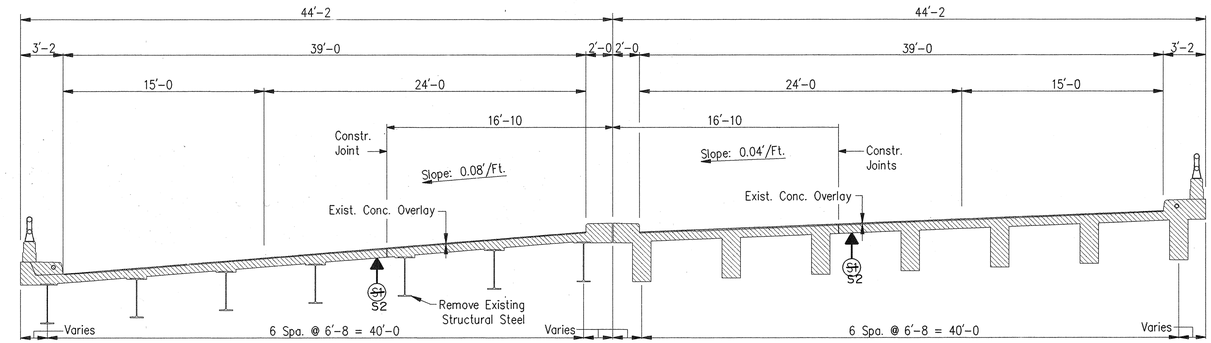

SECTION A-A

Showing Limits of Removal
Scale: 3/16" = 1'-0

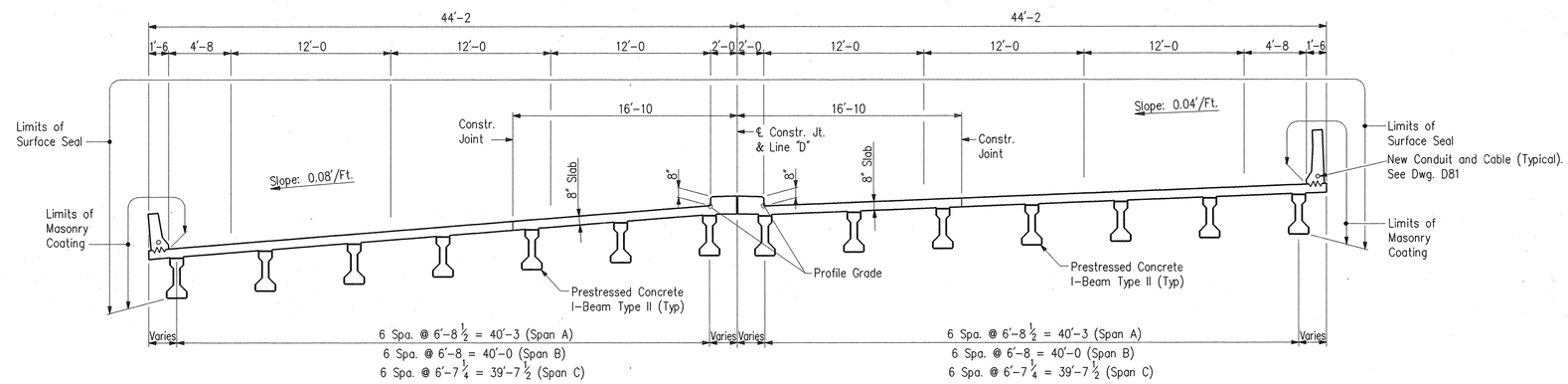

SECTION A-A

Showing New Construction
Scale: 3/16" = 1'-0

Temporary Supports

(S2) (X) New ~~Existing~~ slab to be supported during Phase II ~~I~~ construction.
Temporary loading (exclusive of support beam weight) = 535 Lbs./Lft.

GENERAL PLAN

BRIDGE RECONSTRUCTION
PRESTRESSED CONCRETE I-BEAM BRIDGE
3 SPANS @ 40'-9 9/16, 66'-8, 33'-1 SKEW: 5°40' RT.
CLEAR RDWY. (RADIAL) 40'-8 CONC. BARRIER RAILING
S.R. 23 OVER MISHAWAKA AVENUE

INDIANA DEPARTMENT OF TRANSPORTATION

ST. JOSEPH COUNTY

SCALE:- 3/16" = 1'-0 Unless Otherwise Noted
DATE:- March 29, 1993

David T. Lash

DRAWING:- D59 OF 85 SHEET:- 64 OF 131
PROJECT:- ST/206-6( ) STATION:-
BRIDGE CONTRACT NO. B-20757
BRIDGE FILE:- 23-71-4994B

DAVID T. LASH REGISTERED No. 20470 STATE OF INDIANA PROFESSIONAL ENGINEER

DESIGNED	TWL	C'K'D	PEB
DRAWN	TWL	C'K'D	PEB
TRACED		C'K'D	

Rev. 10/21/93: Reverse Constr. Phasing.

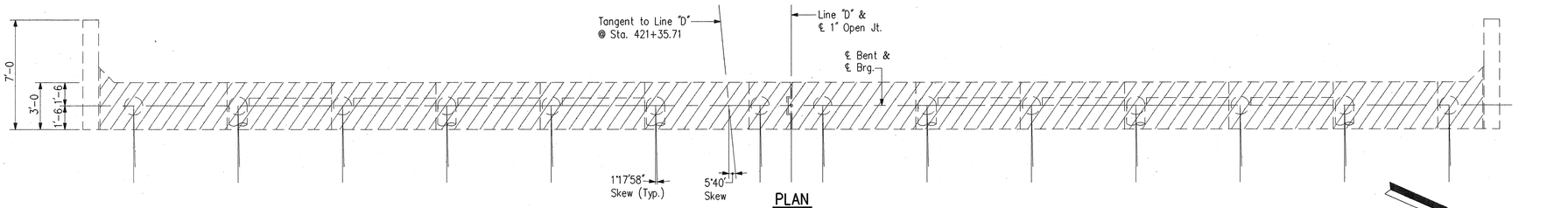

PLAN
(Showing Limits of Removal)

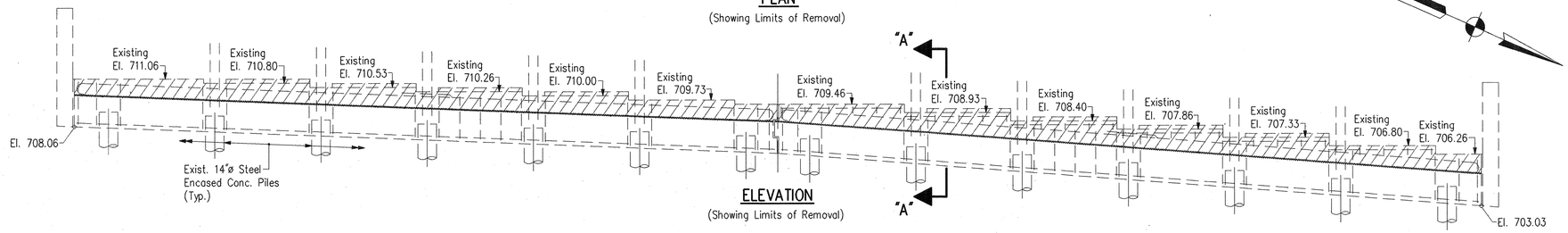

ELEVATION
(Showing Limits of Removal)

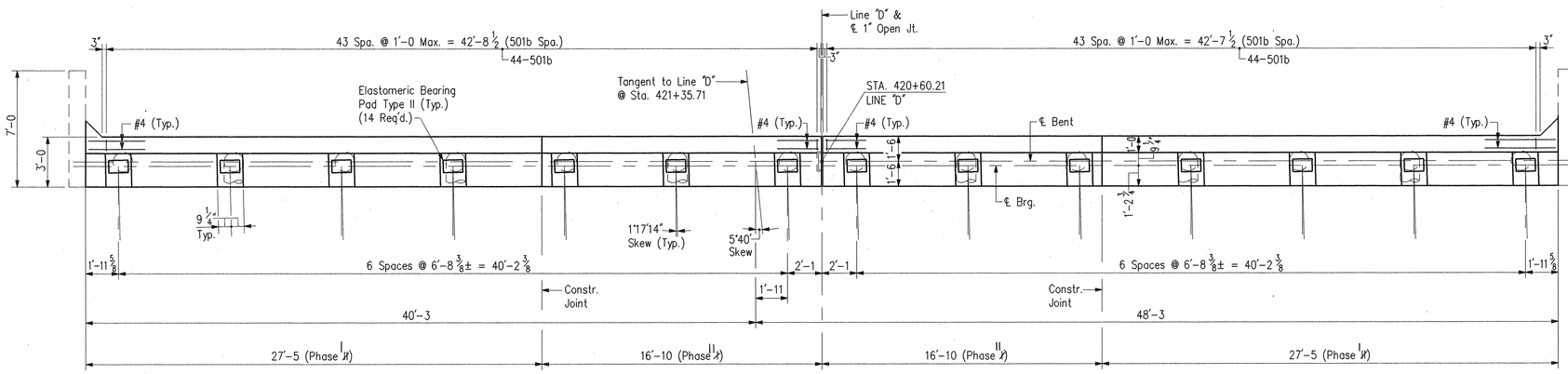

PLAN
(Showing New Construction)

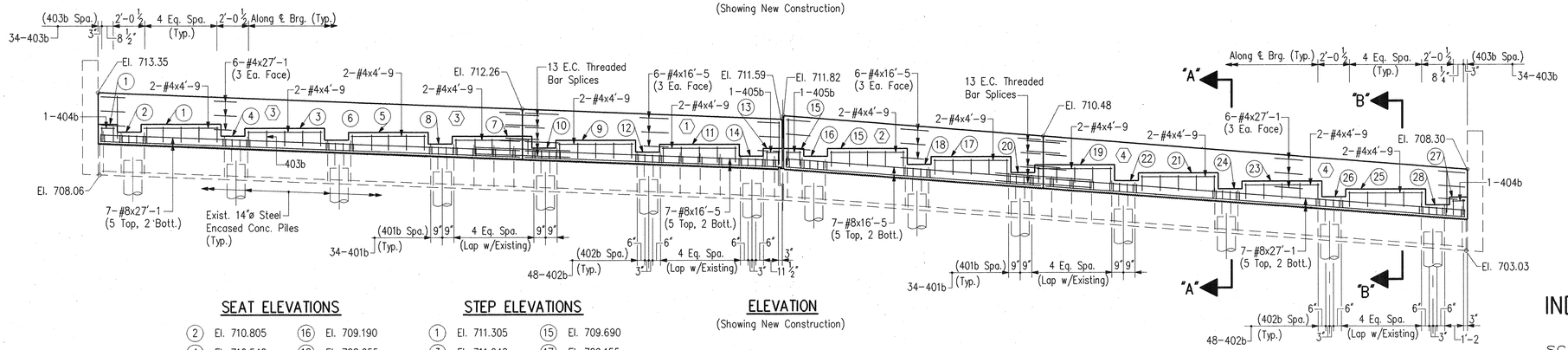

ELEVATION
(Showing New Construction)

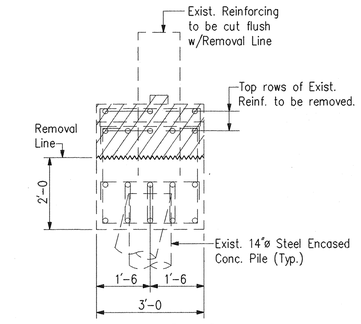

SECTION "A-A"
(Showing Limits of Removal
& Existing Reinforcing)
Scale: 1/2" = 1'-0

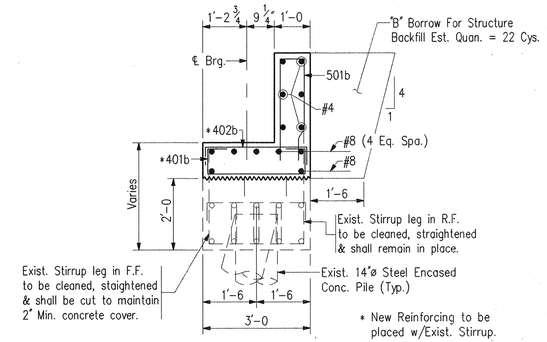

SECTION "A-A"
(Showing New Construction)
Scale: 1/2" = 1'-0

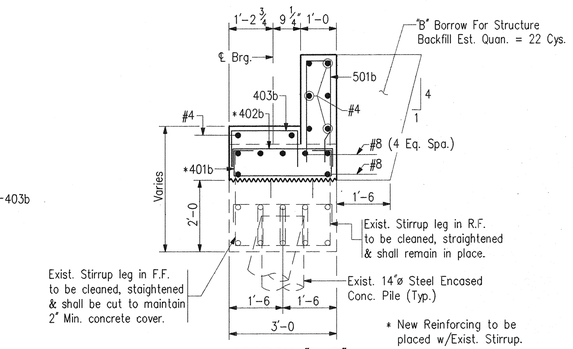

SECTION "B-B"
(Showing New Construction)
Scale: 1/2" = 1'-0

BENT NO. 1 DETAILS

SEAT ELEVATIONS

(2)	El. 710.805	(16)	El. 709.190
(4)	El. 710.540	(18)	El. 708.655
(6)	El. 710.270	(20)	El. 708.120
(8)	El. 710.005	(22)	El. 707.585
(10)	El. 709.735	(24)	El. 707.050
(12)	El. 709.470	(26)	El. 706.515
(14)	El. 709.200	(28)	El. 705.980

STEP ELEVATIONS

(1)	El. 711.305	(15)	El. 709.690
(3)	El. 711.040	(17)	El. 709.155
(5)	El. 710.770	(19)	El. 708.620
(7)	El. 710.505	(21)	El. 708.085
(9)	El. 710.235	(23)	El. 707.550
(11)	El. 709.970	(25)	El. 707.015
(13)	El. 709.700	(27)	El. 706.480

NOTES

- For Reinforcing Bar Notes and Bar Bending Details, See Br. Std. C1.
- For Details of Elastomeric Bearing Pads, See Bridge Standard C3.
- All Reinforcing Steel in End Bents to be Epoxy Coated.
- For General Notes, See Dwg. D1.
- For Bar Bending Diagrams and Bill of Materials, See Dwg. D62

(X) Indicates Pour Number

Rev. 10/21/93: Reverse Constr. Phasing.

INDIANA DEPARTMENT OF TRANSPORTATION
ST. JOSEPH COUNTY

SCALE:- 1/4" = 1'-0 Unless Otherwise Noted

DATE:- March 29, 1993

DOW P. JOHNSON, JR. REGISTERED No. 900022 STATE OF INDIANA PROFESSIONAL ENGINEER

DRAWING:- D60 OF D85 SHEET:- 65 OF 131

PROJECT:- ST/206-6( ) STATION:-

BRIDGE CONTRACT NO. B-20757

BRIDGE FILE:- 23-71-4994B

DESIGNED	AJW	C'K'D	DPJ
DRAWN	PCR	C'K'D	DPJ
TRACED		C'K'D	

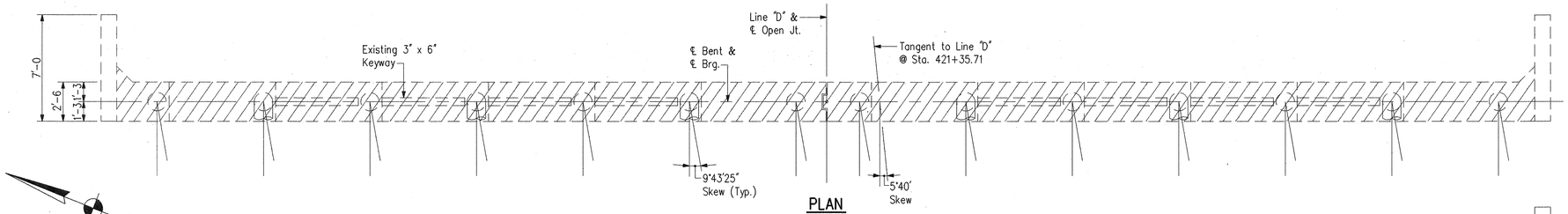

PLAN
(Showing Limits of Removal)

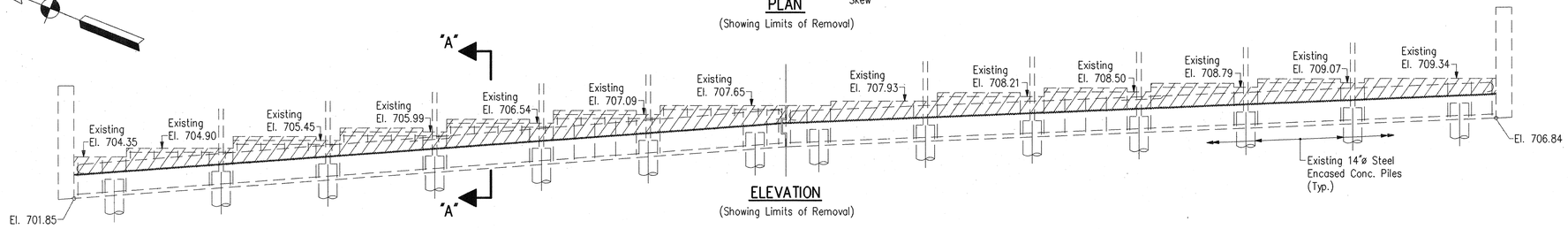

ELEVATION
(Showing Limits of Removal)

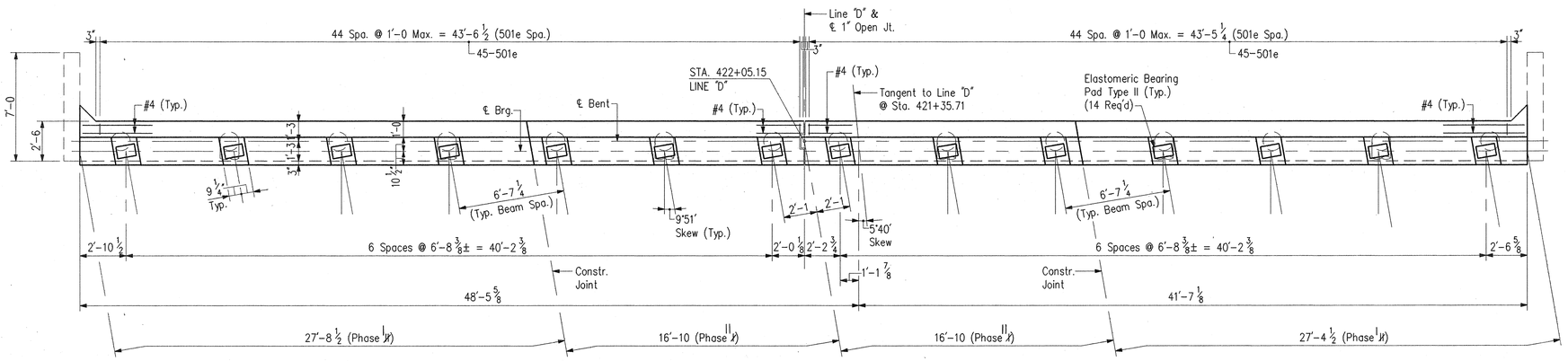

PLAN
(Showing New Construction)

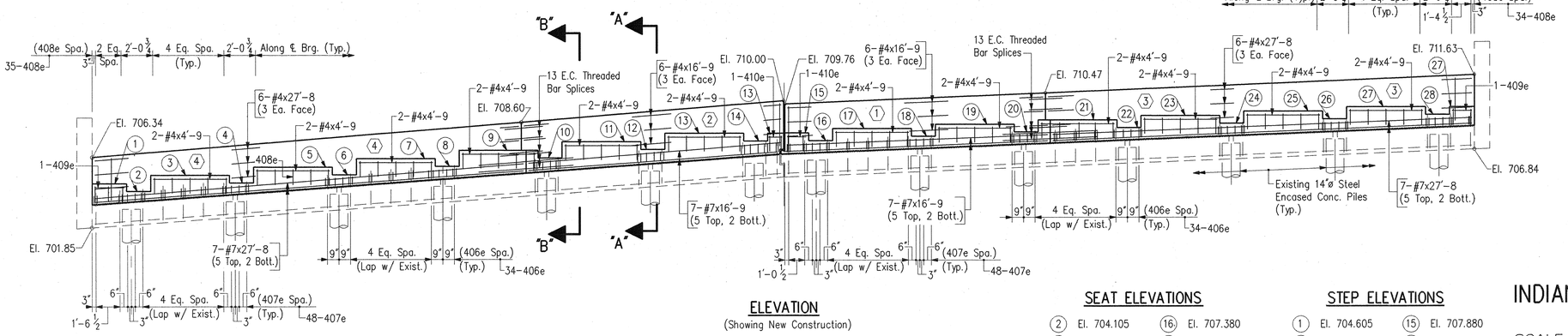

ELEVATION
(Showing New Construction)

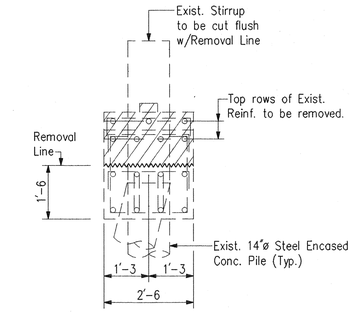

SECTION "A-A"
(Showing Limits of Removal
& Existing Reinforcing)
Scale: 1/2" = 1'-0

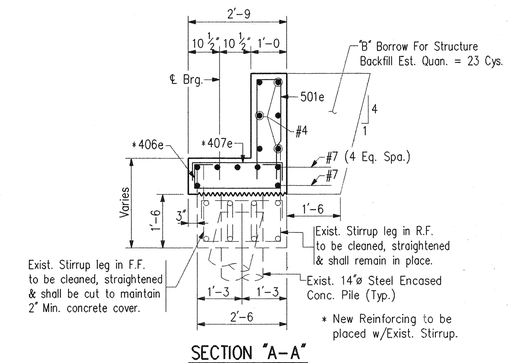

SECTION "A-A"
(Showing New Construction)
Scale: 1/2" = 1'-0

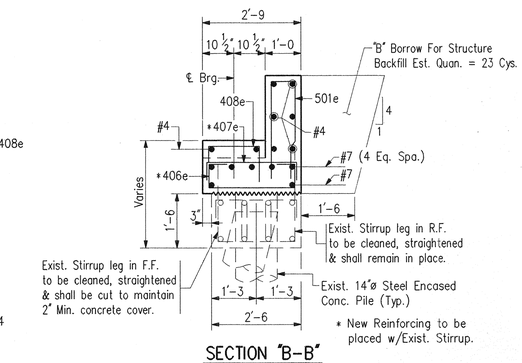

SECTION "B-B"
(Showing New Construction)
Scale: 1/2" = 1'-0

BENT NO. 4 DETAILS

NOTES

- For Reinforcing Bar Notes and Bar Bending Details, See Br. Std. C1.
- For Details of Elastomeric Bearing Pads, See Bridge Standard C3.
- All Reinforcing Steel in End Bents to be Epoxy Coated.
- For General Notes, See Dwg. D1.
- For Bar Bending Diagrams and Bill of Materials, See Dwg. D62.

(X) Indicates Pour Number

Rev. 10/21/93: Reverse Constr. Phasing.

SEAT ELEVATIONS

(2)	El. 704.105	(16)	El. 707.380
(4)	El. 704.650	(18)	El. 707.660
(6)	El. 705.195	(20)	El. 707.940
(8)	El. 705.735	(22)	El. 708.220
(10)	El. 706.280	(24)	El. 708.495
(12)	El. 706.820	(26)	El. 708.775
(14)	El. 707.365	(28)	El. 709.055

STEP ELEVATIONS

(1)	El. 704.605	(15)	El. 707.880
(3)	El. 705.150	(17)	El. 708.160
(5)	El. 705.695	(19)	El. 708.440
(7)	El. 706.235	(21)	El. 708.720
(9)	El. 706.780	(23)	El. 708.995
(11)	El. 707.320	(25)	El. 709.275
(13)	El. 707.865	(27)	El. 709.555

INDIANA DEPARTMENT OF TRANSPORTATION

ST. JOSEPH COUNTY

SCALE:- 1/4" = 1'-0 DATE:- March 29, 1993

DRAWING:- D61 OF D85 SHEET:- 66 OF 131

PROJECT:- ST/206-6( ) STATION:-

BRIDGE CONTRACT NO. B-20757

BRIDGE FILE:- 23-71-4994B

DON R. HERNANDEZ REGISTERED No. 900022 STATE OF INDIANA PROFESSIONAL ENGINEER

DESIGNED	AJW	C'K'D	DPJ
DRAWN	PCR	C'K'D	DPJ
TRACED		C'K'D	

D:\SR23\4994B\ 4994BT4D OPER: PCR TERM:0044 3/25/1993 9:57:51

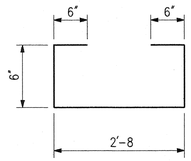

401b x 4'-8

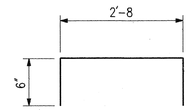

402b x 3'-8

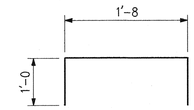

403b x 3'-8

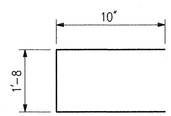

404b x 3'-4

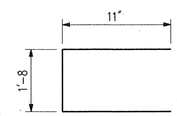

405b x 3'-6

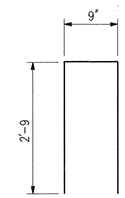

501b x 6'-3

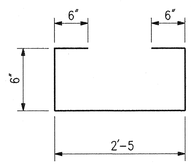

406e x 4'-5

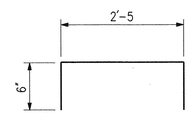

407e x 3'-5

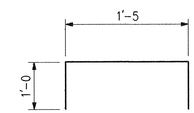

408e x 3'-5

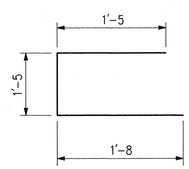

409e x 4'-6

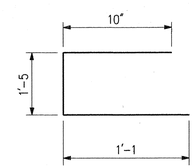

410e x 3'-4

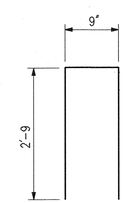

501e x 6'-3

BENT NO. 1
BILL OF MATERIALS

REINFORCING STEEL			
SIZE & MARK	No. OF BARS	LENGTH	WEIGHT (LBS.)
EPOXY COATED REINFORCING			
#8	14	27'-1"	
#8	14	16'-5"	
TOTAL #8 BARS			1626
501b	88	6'-3"	
TOTAL #5 BARS			574
405b	2	3'-6"	
404b	2	3'-4"	
403b	68	3'-8"	
402b	96	3'-8"	
401b	68	4'-8"	
#4	12	27'-1"	
#4	12	16'-5"	
#4	24	4'-9"	
TOTAL #4 BARS			1048
TOTAL EPOXY REINF.			3248

CONCRETE		
Concrete, A in Substructures		
Pour No. 1	3.6 Cys.	
Pour No. 2	4.0 Cys.	
Pour No. 3	6.1 Cys.	
Pour No. 4	6.5 Cys.	
Total Concrete, A in Substructures		20.2 Cys.

MISCELLANEOUS	
Epoxy Coated Threaded Bar Splices	26 Each
Surface Seal	420 Sft.
B-Borrow for Structure Backfill	22 Cys.

BENT NO. 4
BILL OF MATERIALS

REINFORCING STEEL			
SIZE & MARK	No. OF BARS	LENGTH	WEIGHT (LBS.)
EPOXY COATED REINFORCING			
#7	14	27'-8"	
#7	14	16'-9"	
TOTAL #7 BARS			1271
501e	90	6'-3"	
TOTAL #5 BARS			587
410e	2	3'-4"	
409e	2	4'-6"	
408e	69	3'-5"	
407e	96	3'-5"	
406e	68	4'-5"	
#4	12	27'-8"	
#4	12	16'-9"	
#4	24	4'-9"	
TOTAL #4 BARS			1020
TOTAL EPOXY REINF.			2878

CONCRETE		
Concrete, A in Substructures		
Pour No. 1	3.7 Cys.	
Pour No. 2	4.0 Cys.	
Pour No. 3	6.2 Cys.	
Pour No. 4	6.3 Cys.	
Total Concrete, A in Substructures		20.2 Cys.

MISCELLANEOUS	
Epoxy Coated Threaded Bar Splices	26 Each
Surface Seal	428 Sft.
B-Borrow for Structure Backfill	23 Cys.

NOTES

- For Reinforcing Bar Notes and Bar Bending Details, See Br. Std. C1.
- For Details of Elastomeric Bearing Pads, See Bridge Standard C3.
- All Reinforcing Steel in End Bents to be Epoxy Coated.
- For General Notes, See Dwg. D1.

BENT NO. 1 AND NO. 4 DETAILS
AND BILL OF MATERIALS

INDIANA DEPARTMENT OF TRANSPORTATION
ST. JOSEPH COUNTY

SCALE:- None DATE:- March 1993

DRAWING:- D62 OF D85 SHEET:- 67 OF 131
PROJECT:- ST/206-6( ) STATION:-
BRIDGE CONTRACT NO. B-20757
BRIDGE FILE:- 23-71-4994B

DON P. JOHNSON, JR. REGISTERED No. 900022 STATE OF INDIANA PROFESSIONAL ENGINEER

DESIGNED	AJW	C'K'D	DPJ
DRAWN	PCR	C'K'D	DPJ
TRACED		C'K'D	

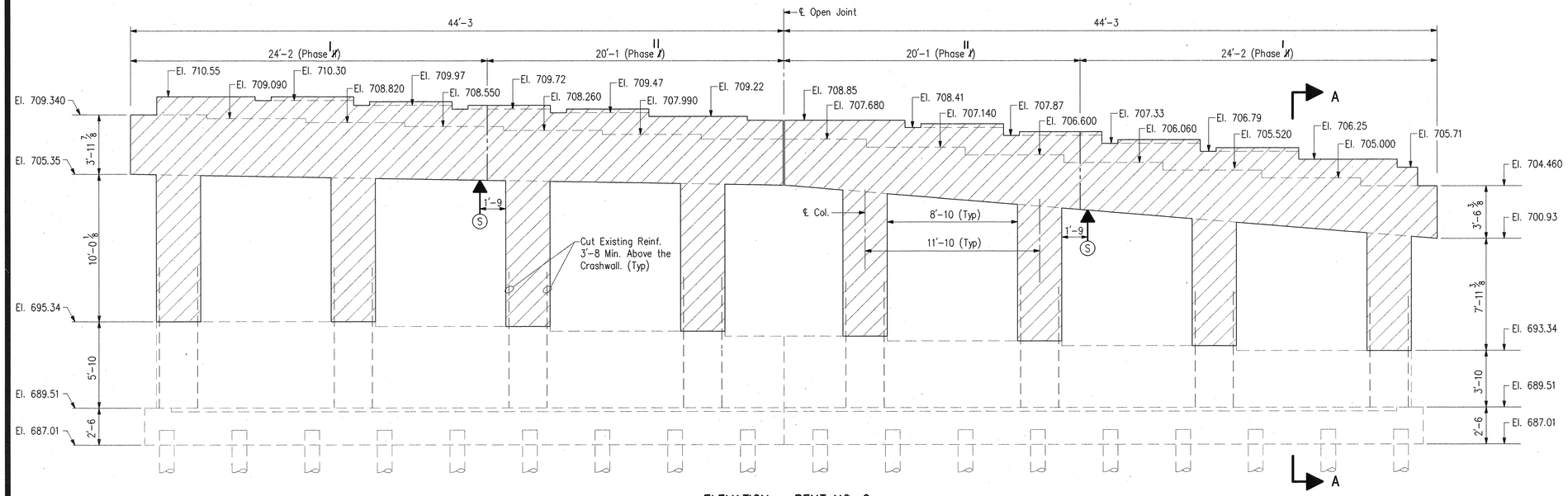

ELEVATION – BENT NO. 2

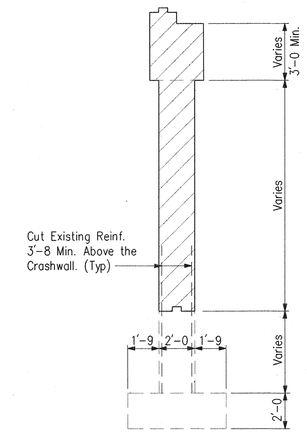

SECTION A-A

Scale: 1/4" = 1'-0

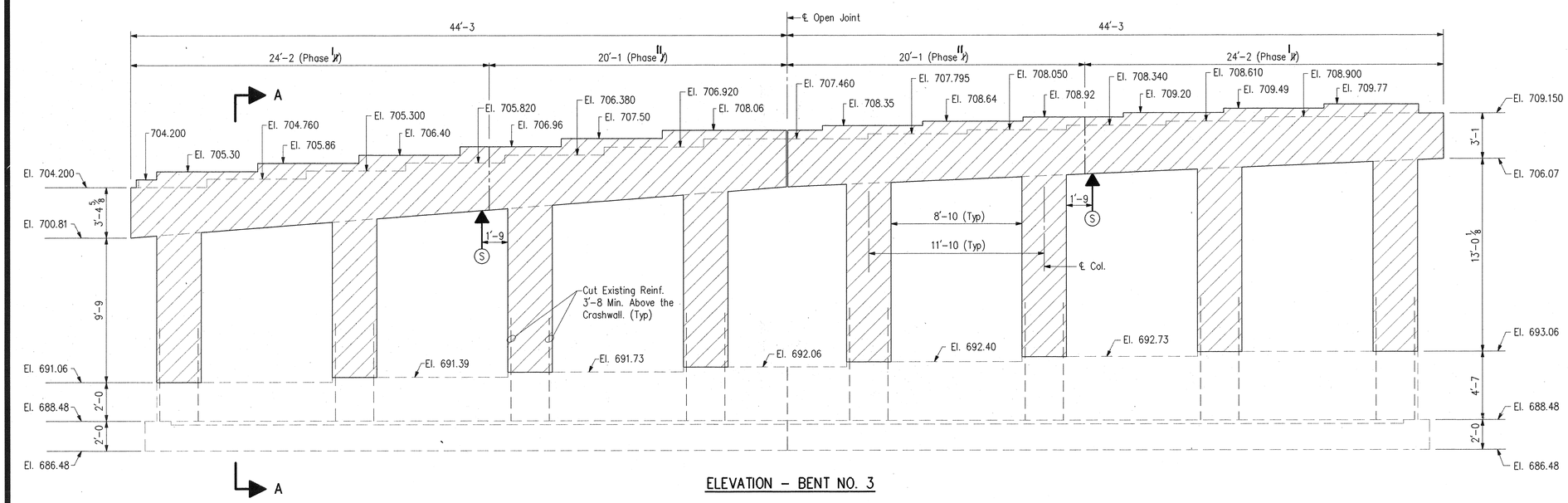

ELEVATION – BENT NO. 3

Temporary Supports

(S) New ~~Exist.~~ bent cap to be supported during Phase II Construction.
Temporary Support Reaction = 90 Kips (Dead Load) + 25 Kips (Live Load)

NOTES:

- For details of new construction of Bents No. 2 and No. 3 See Dwgs. D64 thru D67.

Indicates Removal areas. (Include in the cost of "Present Structure, Remove Portions", LSum.)

BENT NO. 2 AND NO.3 REMOVAL DETAILS

INDIANA DEPARTMENT OF TRANSPORTATION

ST. JOSEPH COUNTY

SCALE:- 1/4" = 1'-0 DATE: March 29, 1993

DRAWING:- D63 OF D85 SHEET:- 68 OF 131

PROJECT:- ST/206-6( ) STATION:-

BRIDGE CONTRACT NO. B-20757

BRIDGE FILE:- 23-71-4994B

DEWP. JOHNSON, SR. REGISTERED No. 900022 STATE OF INDIANA PROFESSIONAL ENGINEER

DESIGNED	TWL	C'K'D	DDC
DRAWN	TWL	C'K'D	DDC
TRACED		C'K'D	

Rev. 10/21/93: Reverse Constr. Phasing.

D:\SR23\4994B\ 4994REMV OPER: PCR TERM:0044 3/26/1993 16:54:55

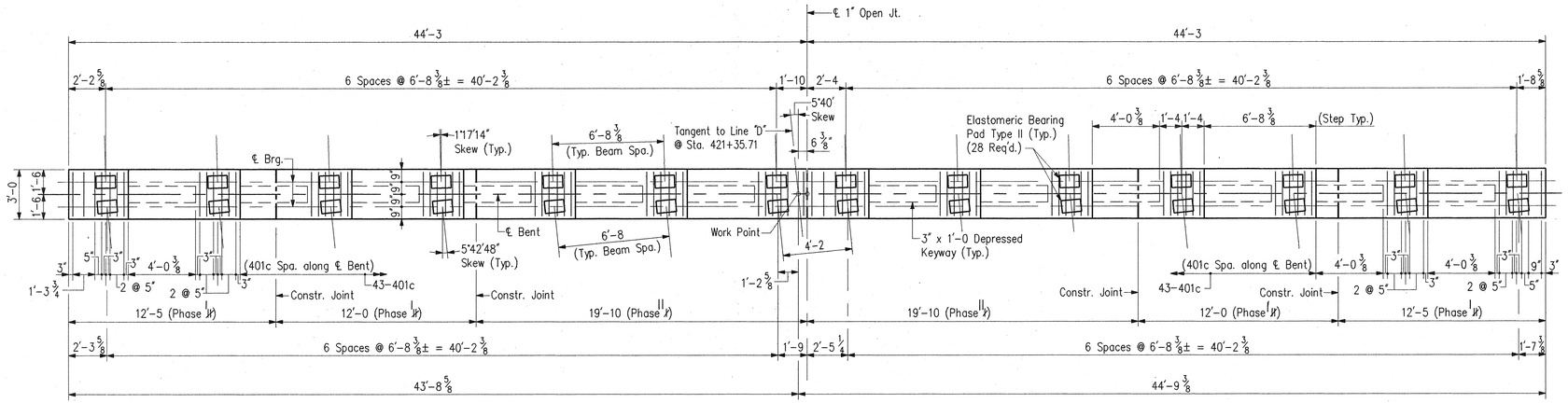

CAP PLAN

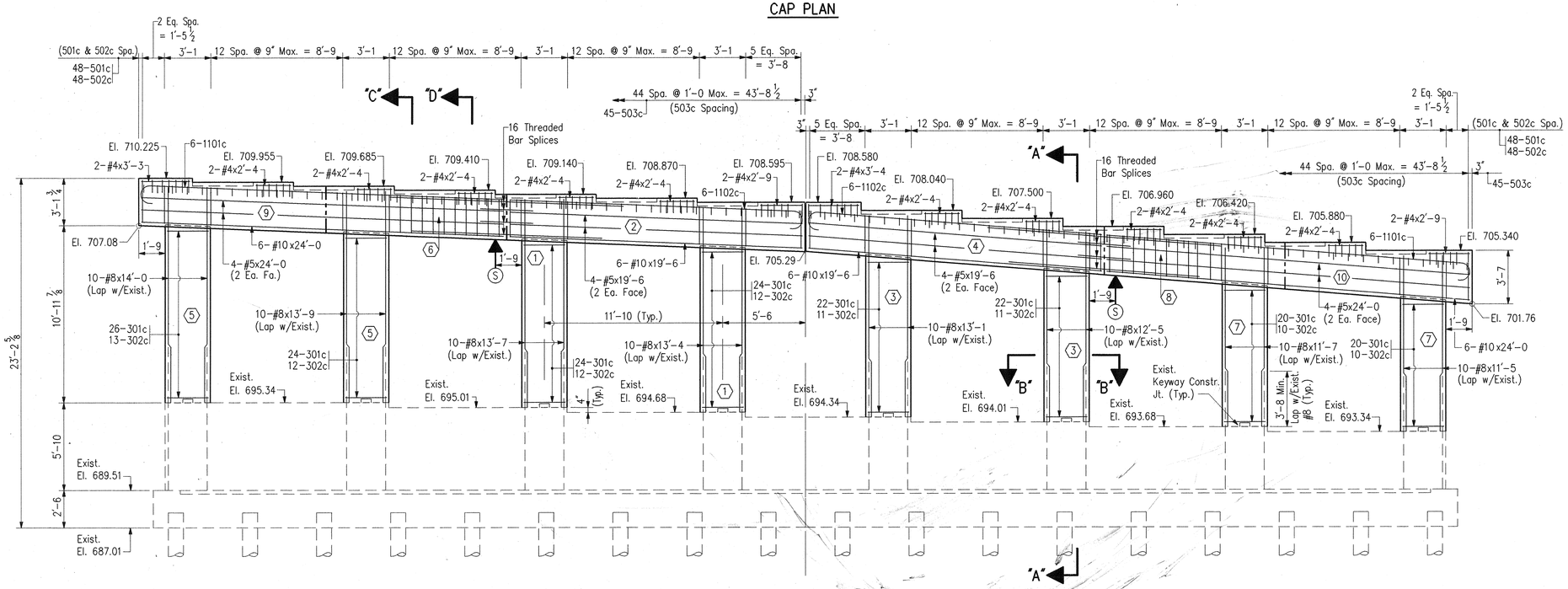

ELEVATION

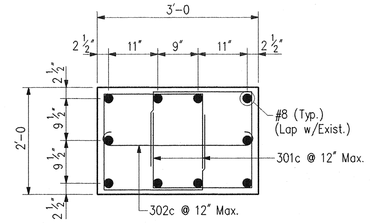

SECTION "B-B"

Scale: 3/4" = 1'-0

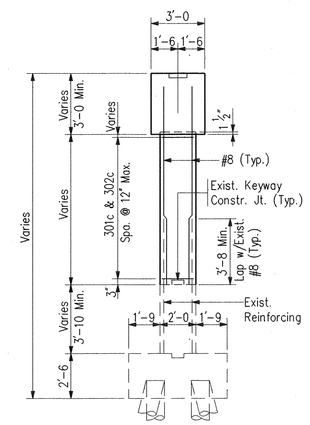

SECTION "A-A"

Temporary Supports

(S) ~~Exist.~~ New bent cap to be supported during Phase II Construction.
Temporary Support Reaction = 90 Kips (Dead Load) + 25 Kips (Live Load)

NOTES

- For Reinforcing Bar Notes and Bar Bending details, See Br. Std. C1.
- For Details of Elastomeric Bearing Pads, See Bridge Std. C3.
- For General Notes, See Dwg. D1.
- For Sections "C" and "D", See Dwg. D65.
- For Bar Bending Diagrams and Bill of Materials, See Dwg. D65.
- Exist. Reinforcing to remain in place shall be cut, cleaned and straightened.

(X) Indicates pour numbers.

Rev. 10/21/93: Reverse Constr. Phasing.

BENT NO. 2 DETAILS

INDIANA DEPARTMENT OF TRANSPORTATION

ST. JOSEPH COUNTY

SCALE:- 1/4" = 1'-0 Unless Otherwise Noted.

DATE:- March 29, 1993

DRAWING:- D64 OF D85 SHEET:- 69 OF 131

PROJECT:- ST/206-6( ) STATION:-

BRIDGE CONTRACT NO. B-20757

BRIDGE FILE:- 23-71-4994B

DON P. JOHNSON REGISTERED No. 900022 STATE OF INDIANA PROFESSIONAL ENGINEER

DESIGNED	DPJ	C'K'D	DDC
DRAWN	PCR	C'K'D	DDC
TRACED		C'K'D	

D:\SR23\4994B\ 4994BT2D OPER: PCR TERM:0044 3/26/1993 16:46:20

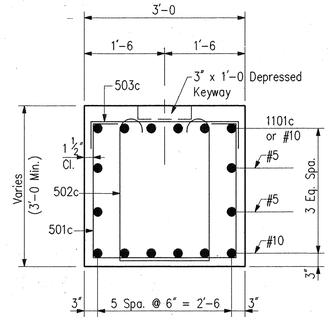

SECTION "C"

Scale: 3/4" = 1'-0

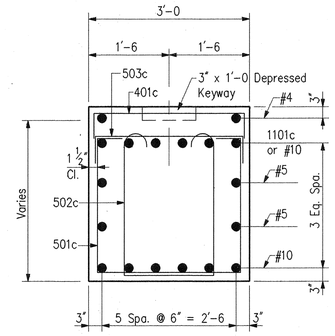

SECTION "D"

Scale: 3/4" = 1'-0

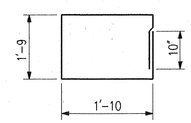

301c x 8'-0

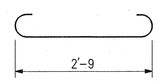

302c x 3'-7

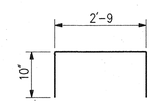

401c x 4'-5

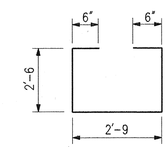

501c x 8'-9

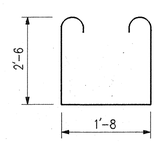

502c x 7'-10

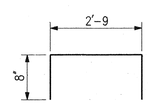

503c x 3'-9

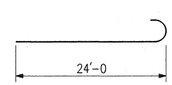

1101c x 25'-7

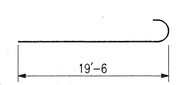

1102c x 21'-1

BILL OF MATERIALS

REINFORCING STEEL			
SIZE & MARK	No. OF BARS	LENGTH	WEIGHT (LBS.)
PLAIN REINFORCING			
1102c	12	21'-1"	
1101c	12	25'-7"	
TOTAL #11 BARS			2975
#10	12	19'-6"	
#10	12	24'-0"	
TOTAL #10 BARS			2246
#8	10	14'-0"	
#8	10	13'-9"	
#8	10	13'-7"	
#8	10	13'-4"	
#8	10	13'-1"	
#8	10	12'-5"	
#8	10	11'-7"	
#8	10	11'-5"	
TOTAL #8 BARS			2755
503c	90	3'-9"	
502c	96	7'-10"	
501c	96	8'-9"	
#5	8	19'-6"	
#5	8	24'-0"	
TOTAL #5 BARS			2376
401c	86	4'-5"	
#4	2	3'-4"	
#4	2	3'-3"	
#4	4	2'-9"	
#4	20	2'-4"	
TOTAL #4 BARS			301
302c	91	3'-7"	
301c	182	8'-0"	
TOTAL #3 BARS			670
TOTAL PLAIN REINF.			11323
CONCRETE			
Concrete, A in Substructure			
Pour No. 1	4.9 Cys.		
Pour No. 2	7.0 Cys.		
Pour No. 3	4.5 Cys.		
Pour No. 4	7.2 Cys.		
Pour No. 5	5.1 Cys.		
Pour No. 6	4.2 Cys.		
Pour No. 7	4.0 Cys.		
Pour No. 8	4.4 Cys.		
Pour No. 9	4.4 Cys.		
Pour No. 10	4.6 Cys.		
Total Concrete, A in Substructure			50.3 Cys.
MISCELLANEOUS			
Threaded Bar Splices			32 Each
Surface Seal			266 Sft.

NOTES

- For Reinforcing Bar Notes and Bar Bending Details, See Br. Std. C1.
- For Additional Notes and Details, See Dwg. D64.
- For Location of Sections "C" and "D", See Dwg. D64.
- For General Notes, See Dwg. D1.

BENT NO. 2 DETAILS & BILL OF MATERIALS

INDIANA DEPARTMENT OF TRANSPORTATION

ST. JOSEPH COUNTY

SCALE:- 1/4" = 1'-0 Unless Otherwise Noted.

DATE:- March 29, 1993

DON P. JOHNSON, JR. REGISTERED No. 900022 STATE OF INDIANA PROFESSIONAL ENGINEER

DRAWING:- D65 OF D85 SHEET:- 70 OF 131

PROJECT:- ST/206-6( ) STATION:-

BRIDGE CONTRACT NO. B-20757

BRIDGE FILE:- 23-71-4994B

DESIGNED	DPJ	C'K'D	DDC
DRAWN	PCR	C'K'D	DDC
TRACED		C'K'D	

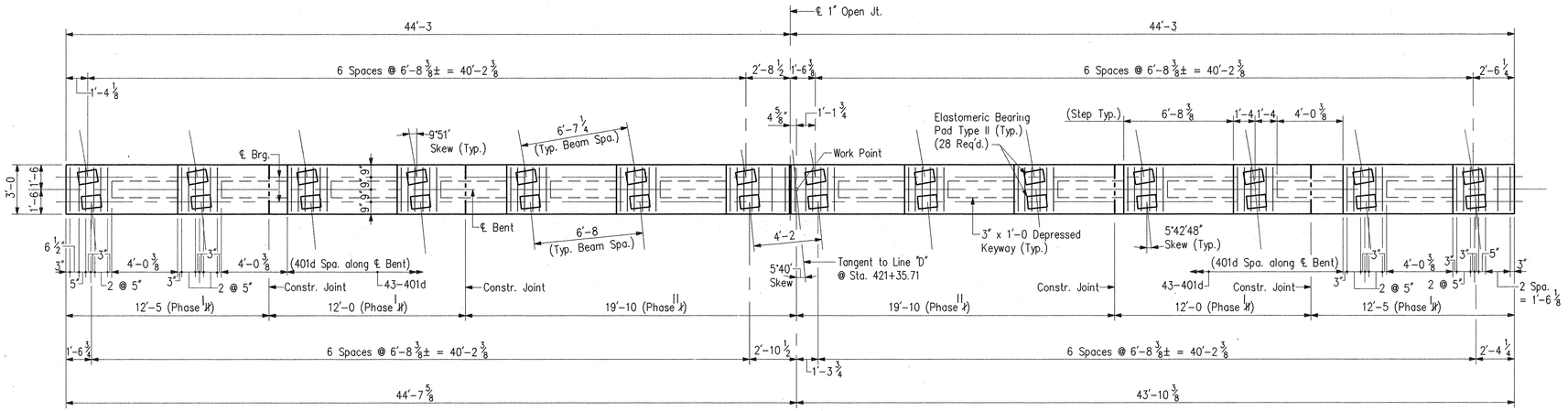

CAP PLAN

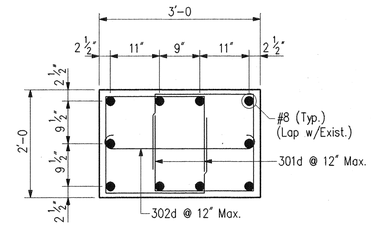

SECTION "B-B"

Scale: 3/4" = 1'-0

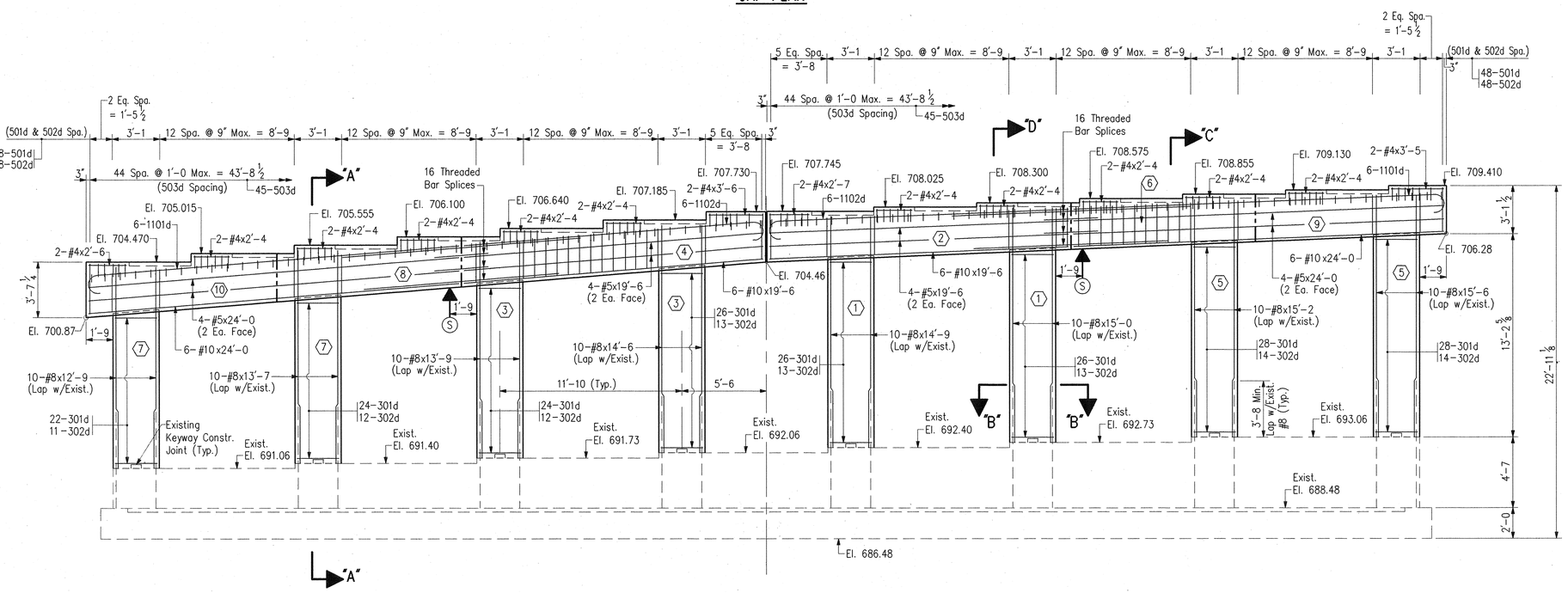

ELEVATION

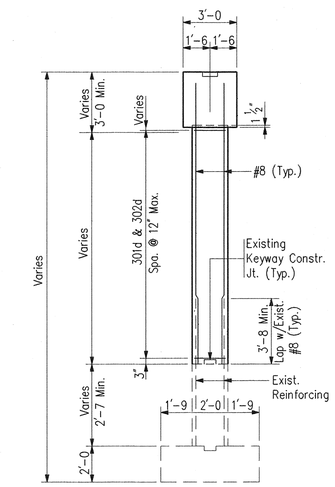

SECTION "A-A"

Temporary Supports

(S) ~~Exist.~~ New bent cap to be supported during Phase II Construction.
Temporary Support Reaction = 90 Kips (Dead Load) + 25 Kips (Live Load)

NOTES

- For Reinforcing Bar Notes and Bar Bending details, See Br. Std. C1.
- For Details of Elastomeric Bearing Pads, See Bridge Std. C3.
- For General Notes, See Dwg. D1.
- For Sections "C" and "D", See Dwg. D67.
- For Bar Bending Diagrams and Bill of Materials, See Dwg. D67.
- Exist. Reinforcing to remain in place shall be cut, cleaned and straightened.

(X) Indicates pour numbers.

Rev. 10/21/93: Reverse Constr. Phasing.

BENT NO. 3 DETAILS

INDIANA DEPARTMENT OF TRANSPORTATION

ST. JOSEPH COUNTY

SCALE:- 1/4"=1'-0; unless otherwise noted.

DATE:- March 1993

DRAWING:- D66 OF D85 SHEET:- 71 OF 131

PROJECT:- ST/206-6( )

STATION:-

BRIDGE CONTRACT NO. B-20757

BRIDGE FILE:- 23-71-4994B

DON P. JOHNSON, JR. REGISTERED No. 900022 STATE OF INDIANA PROFESSIONAL ENGINEER

DESIGNED	DPJ	C'K'D	DDC
DRAWN	PCR	C'K'D	DDC
TRACED		C'K'D	

D:\SR23\4994B\ 4994BT3D OPER: PCR TERM:0044 3/26/1993 16:52:53

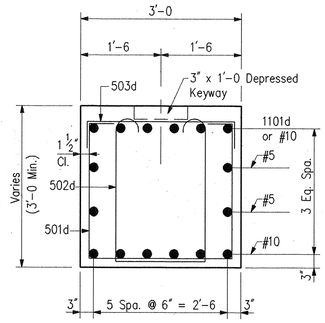

SECTION "C"

Scale: 3/4" = 1'-0

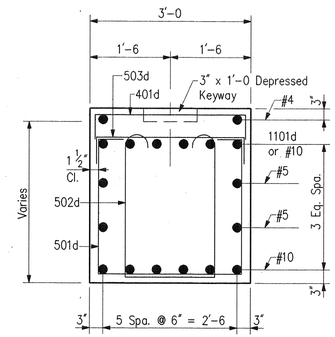

SECTION "D"

Scale: 3/4" = 1'-0

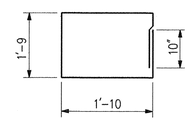

301d x 8'-0

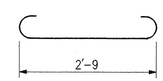

302d x 3'-7

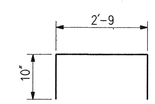

401d x 4'-5

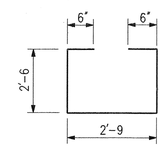

501d x 8'-9

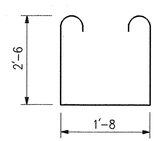

502d x 7'-10

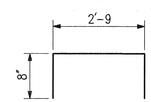

503d x 3'-9

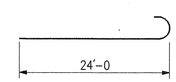

1101d x 25'-7

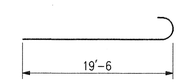

1102d x 21'-1

BILL OF MATERIALS

REINFORCING STEEL			
SIZE & MARK	No. OF BARS	LENGTH	WEIGHT (LBS.)
PLAIN REINFORCING			
1102d	12	21'-1"	
1101d	12	25'-7"	
TOTAL #11 BARS			2975
#10	12	19'-6"	
#10	12	24'-0"	
TOTAL #10 BARS			2246
#8	10	15'-6"	
#8	10	15'-2"	
#8	10	15'-0"	
#8	10	14'-9"	
#8	10	14'-6"	
#8	10	13'-9"	
#8	10	13'-7"	
#8	10	12'-9"	
TOTAL #8 BARS			3071
503d	90	3'-9"	
502d	96	7'-10"	
501d	96	8'-9"	
#5	8	19'-6"	
#5	8	24'-0"	
TOTAL #5 BARS			2376
401d	86	4'-5"	
#4	2	3'-6"	
#4	2	3'-5"	
#4	2	2'-7"	
#4	2	2'-6"	
#4	20	2'-4"	
TOTAL #4 BARS			301
302d	102	3'-7"	
301d	204	8'-0"	
TOTAL #3 BARS			751
TOTAL PLAIN REINF.			11720
CONCRETE			
Concrete, A in Substructure			
Pour No. 1	5.5 Cys.		
Pour No. 2	6.9 Cys.		
Pour No. 3	5.2 Cys.		
Pour No. 4	7.3 Cys.		
Pour No. 5	5.7 Cys.		
Pour No. 6	4.3 Cys.		
Pour No. 7	4.6 Cys.		
Pour No. 8	4.4 Cys.		
Pour No. 9	4.4 Cys.		
Pour No. 10	4.6 Cys.		
Total Concrete, A in Substructure			52.9 Cys.
MISCELLANEOUS			
Threaded Bar Splices			32 Each
Surface Seal			266 Sft.

NOTES

- For Reinforcing Bar Notes and Bar Bending Details, See Br. Std. C1.
- For Additional Notes and Details, See Dwg. D66.
- For Location of Sections "C" and "D", See Dwg. D66.
- For General Notes, See Dwg. D1.

BENT NO. 3 DETAILS & BILL OF MATERIALS

INDIANA DEPARTMENT OF TRANSPORTATION

ST. JOSEPH COUNTY

SCALE:- 1/4" = 1'-0 Unless Otherwise Noted.

DATE:- March 29 1993

DRAWING:- D67 OF D85 SHEET:- 72 OF 131

PROJECT:- ST/206-6( ) STATION:-

BRIDGE CONTRACT NO. B-20157

BRIDGE FILE:- 23-71-4994B

DON P. JOHNSON, JR. REGISTERED No. 900022 STATE OF INDIANA PROFESSIONAL ENGINEER

DESIGNED	DPJ	C'K'D	DDC
DRAWN	PCR	C'K'D	DDC
TRACED		C'K'D	

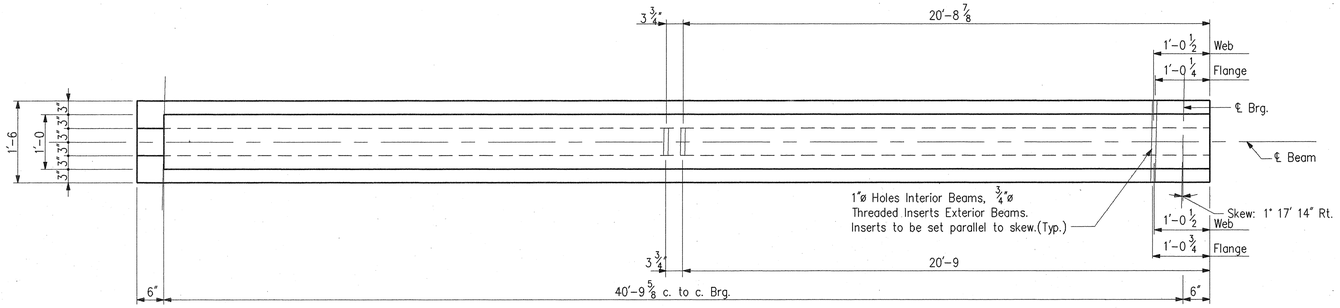

PLAN – BEAM 1

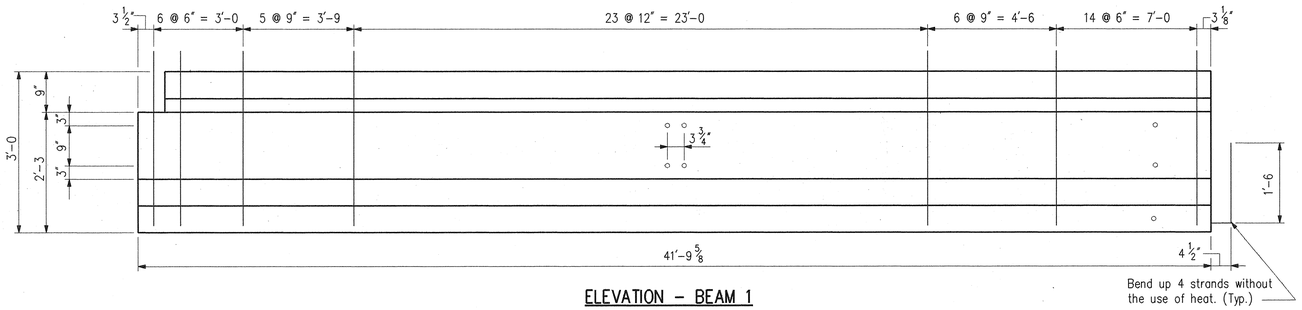

ELEVATION – BEAM 1

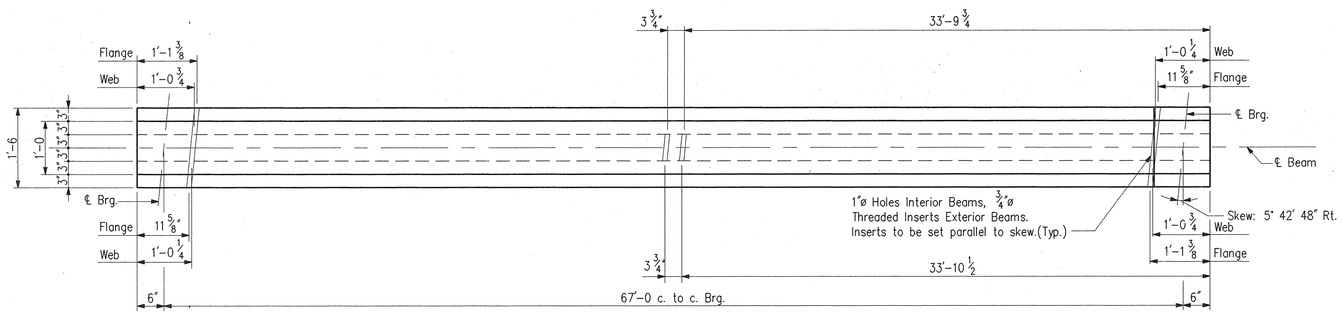

PLAN – BEAM 2

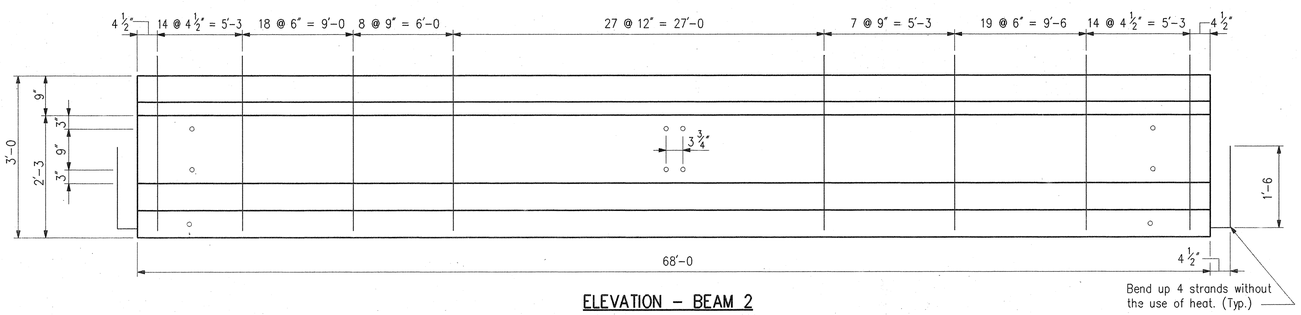

ELEVATION – BEAM 2

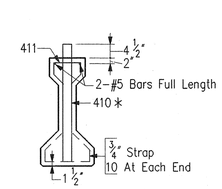

STIRRUP DETAIL

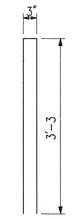

410 * X 6'-9

* Indicates Epoxy Coated

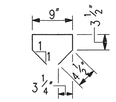

411 X 2'-1

NOTE:

- Bars 410 and 411 combine to form one stirrup. All bars to be #4 reinforcing.

NOTE:

Bridge Seat Elevations were calculated using a 1/2" minimum fillet plus residual camber. Beam fillets will vary along the length of the beam due to the residual camber.

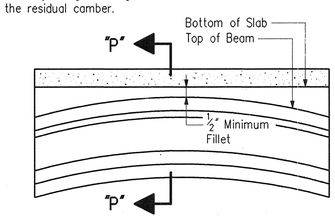

ELEVATION

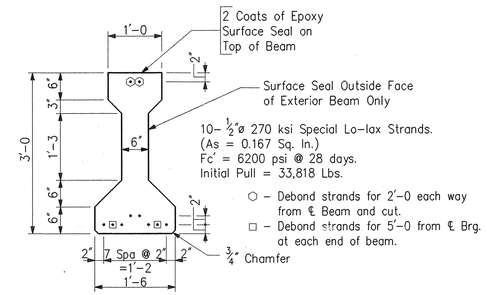

TYPICAL SECTION – BEAM 1

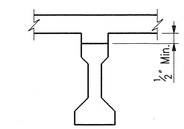

SECTION P–P

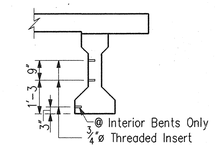

SECTION – OUTSIDE BEAM

	Beam 1	Beam 2
Initial Beam Camber, in.	0.5854	2.8555
D.L. Deflection, in.	-0.2335	-1.6685
Residual Camber, in.	0.3519	1.1870

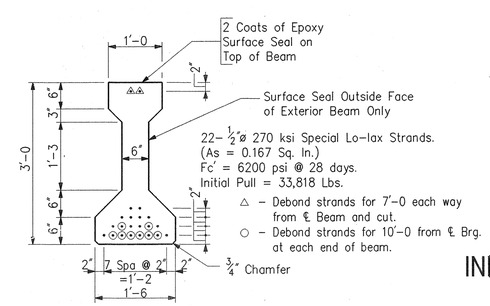

TYPICAL SECTION – BEAM 2

NOTES:

- See Bridge Standard PB2 for additional beam details.
- See Bridge Standard PB10 for tolerances for fabrication of prestressed beams.
- See Bridge Standard PB11 for Type 2 Bearing Pads.
- See Bridge Standard C1 for Reinforcing Bar Notes.
- The Prestressed Beams shall be cast a minimmum of 15 days before the deck is poured.
- The concrete strength must be 5600 psi or greater before prestressin force is applied.
- The cost of elastomeric bearing pads, 3/4"ø x 2'-6 threaded dowels, 3/4"ø threaded inserts, expanded polystyrene, top sealer, outside face of exterior beam sealer, and prestressed concrete I-Beams to be included in the lump sum bid for "Concrete Structural Members".
- Concrete Strengths:
  Beam, 28 Days = 6200 psi
  Beam, Release = 5600 psi
  Slab = 4000 psi
- Stirrup Yield = 60,000 psi
- All straight strands. None are draped.

PRESTRESSED CONCRETE TYPE II I-BEAM DETAILS

INDIANA DEPARTMENT OF TRANSPORTATION

ST. JOSEPH COUNTY

SCALE:- None

DATE:- March 29, 1993

David T. Lash

DAVID T. LASH REGISTERED No. 20470 STATE OF INDIANA PROFESSIONAL ENGINEER

DRAWING:- D68 OF 90 SHEET:- 73 OF 131

PROJECT:- ST/206-6( ) STATION:-

BRIDGE CONTRACT NO. B-20757

BRIDGE FILE:- 23-71-4994B

DESIGNED dow C'K'D

DRAWN dow C'K'D

TRACED C'K'D

D:\20BR\4994\4994BM1 OPER: twl TERM:0068 12/30/1992 16:11:27

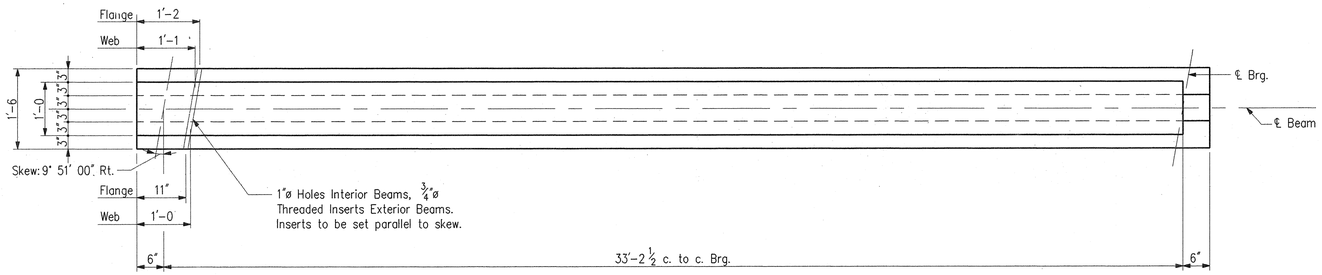

PLAN – BEAM 3

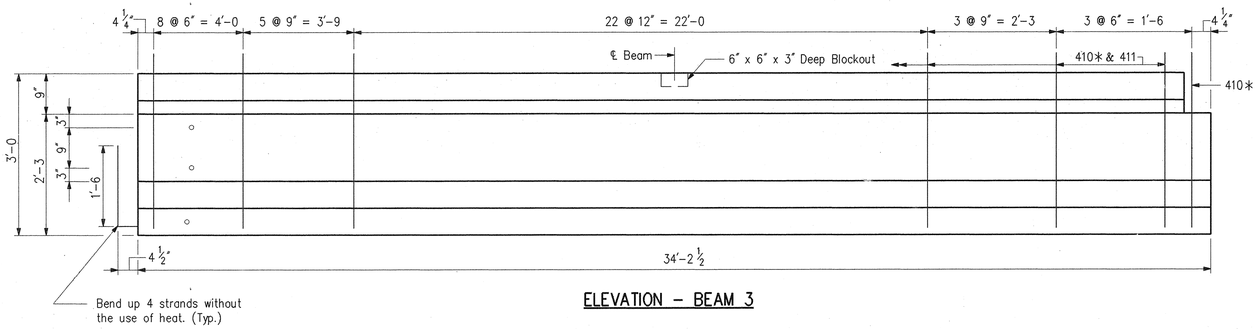

ELEVATION – BEAM 3

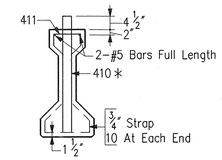

STIRRUP DETAIL

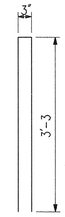

410 * X 6'-9

* Indicates Epoxy Coated

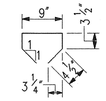

411 X 2'-1

NOTE:

- Bars 410 and 411 combine to form one stirrup. All bars to be #4 reinforcing.

NOTE:

Bridge Seat Elevations were calculated using a 1/2" minimum fillet plus residual camber. Beam fillets will vary along the length of the beam due to the residual camber.

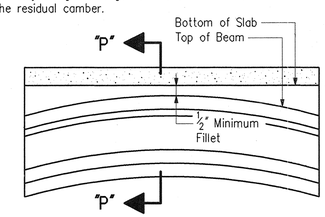

ELEVATION

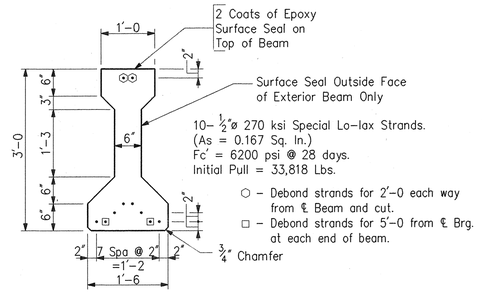

TYPICAL SECTION – BEAM 3

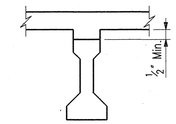

SECTION P–P

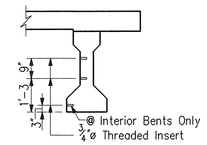

SECTION – OUTSIDE BEAM

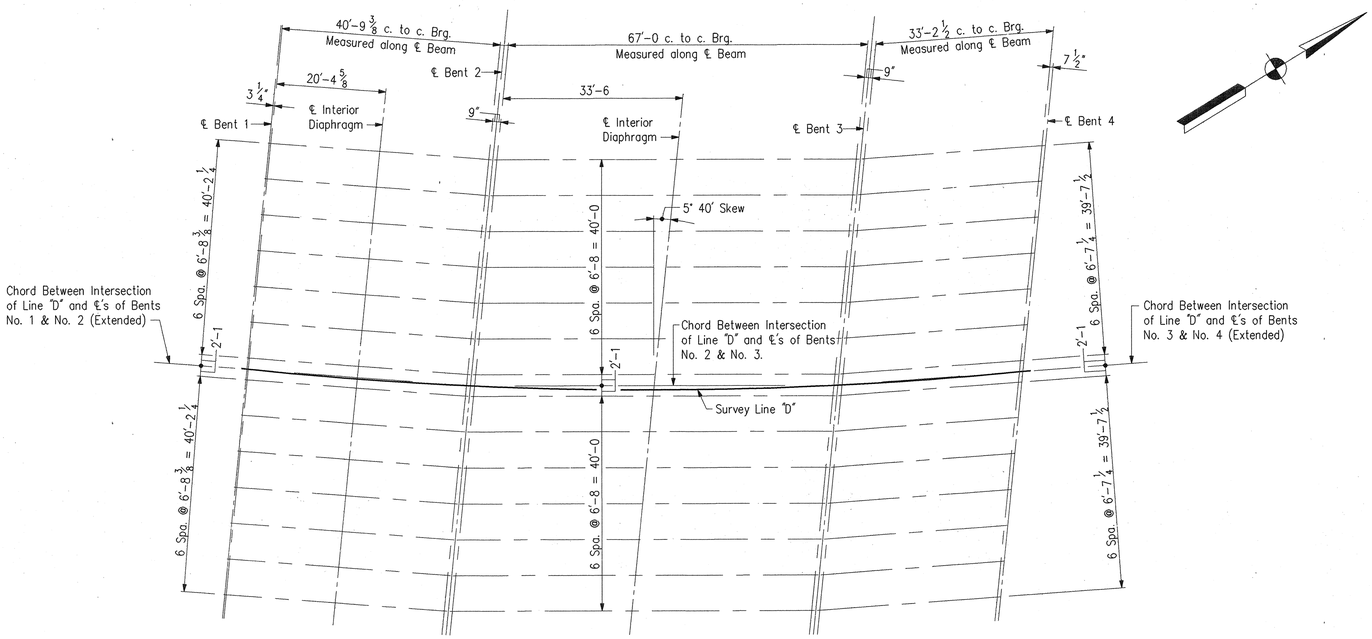

FRAMING PLAN

No Scale

	Beam 3
Initial Beam Camber, in.	0.3899
D.L. Deflection, in.	-0.0966
Residual Camber, in.	0.2933

NOTES:

- See Bridge Standard PB2 for additional beam details.
- See Bridge Standard PB10 for tolerances for fabrication of prestressed beams.
- See Bridge Standard PB11 for Type 2 Bearing Pads.
- See Bridge Standard C1 for Reinforcing Bar Notes.
- The Prestressed Beams shall be cast a minimmum of 15 days before the deck is poured.
- The concrete strength must be 5600 psi or greater before prestressing force is applied.
- The cost of elastomeric bearing pads, 3/4"ø x 2'-6 threaded dowels, 3/4"ø threaded inserts, expanded polystyrene, top sealer, outside face of exterior beam sealer, and prestressed concrete I-Beams to be included in the lump sum bid for "Concrete Structural Members".
- Concrete Strengths:
  Beam, 28 Days = 6200 psi
  Beam, Release = 5600 psi
  Slab = 4000 psi
- Stirrup Yield = 60,000 psi
- All straight strands. None are draped.

PRESTRESSED CONCRETE TYPE II I-BEAM DETAILS

INDIANA DEPARTMENT OF TRANSPORTATION

ST. JOSEPH COUNTY

SCALE:- None

DATE:- March 29, 1993

David T. Lash

DRAWING:- D69 OF 90 SHEET:- 74 OF 131

PROJECT:- ST/206-6( ) STATION:-

BRIDGE CONTRACT NO. B-20757

BRIDGE FILE:- 23-71-4994B

DAVID T. LASH REGISTERED No. 20470 STATE OF INDIANA PROFESSIONAL ENGINEER

DESIGNED dow C'K'D
DRAWN dow C'K'D
TRACED C'K'D

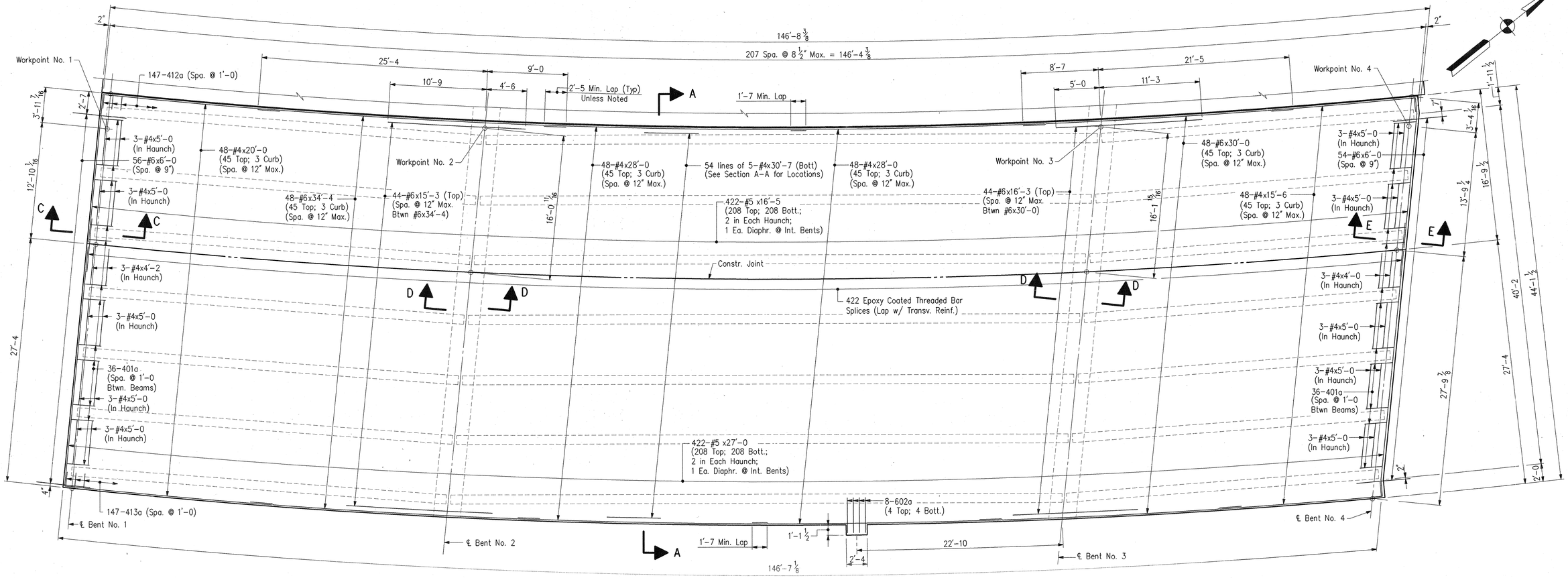

PLAN

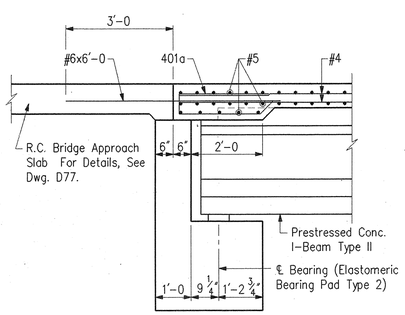

SECTION C-C

Scale: 1/2" = 1'-0

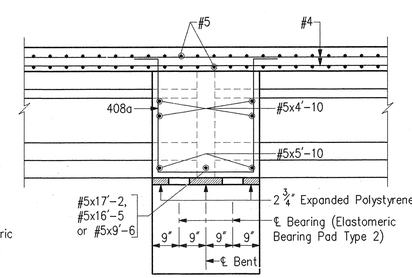

SECTION D-D

Scale: 1/2" = 1'-0

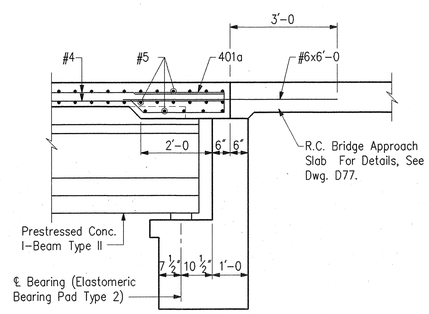

SECTION E-E

Scale: 1/2" = 1'-0

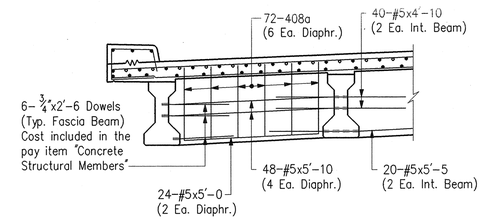

TYPICAL DIAPHRAGM @ BENTS NO. 2 AND NO.3

Scale: 1/2" = 1'-0

NOTES:

- For reinforcing bar notes and bar bending details see Bridge Standard C1.
- All reinforcing steel in Superstructure and Concrete Barrier Railing shall be epoxy coated.
- All concrete to be class C.
- For Section "A-A", Bent Bars, and Bill of Materials, see Dwg. D72.
- The top reinforcing in the deck shall be securely tied to the deck forms or beams to prevent lifting during concrete placement.
- For concrete railing details, see Dwg. D75.
- For floor details of southbound lanes, see Dwg. D71.
- For pour diagram, see Dwg. D72.
- Sequence of pours to be made in order of pour numbers. All superstructure construction joints are optional except as noted, and pours may be made continuous provided the pour terminates at a construction joint indicated on the plans. The contractor may change the width of pours, sequence of pours, or location of construction joints subject to the approval of the engineer.
- The contractor will have the option of using permanent deck forms for the concrete bridge floor in lieu of removable forms.
- Suitable restraint shall be provided to prevent the rotation of the outside beams from construction loads such as finishing machine, forms, etc.
- All transverse reinforcing shall be placed parallel to the ℄ of bents.
- For bridge lighting details, see Bridge Standard R2B.
- For location of Interior diaphragms, see framing plan on Dwg. D69.
- For location of workpoints, see Dwg. D57.

FLOOR DETAILS - NORTHBOUND LANES

INDIANA DEPARTMENT OF TRANSPORTATION

ST. JOSEPH COUNTY

SCALE:- 3/16" = 1'-0 Unless Otherwise Noted

DATE:- March 29, 1993

David T Lash

DRAWING:- D70 OF 85 SHEET:- 75 OF 131

PROJECT:- ST/206-6( ) STATION:-

BRIDGE CONTRACT NO. B-20757

BRIDGE FILE:- 23-71-4994B

DAVID T. LASH REGISTERED No. 20470 STATE OF INDIANA PROFESSIONAL ENGINEER

DESIGNED	DPJ	C'K'D	DDC
DRAWN	TWL	C'K'D	DDC
TRACED		C'K'D	

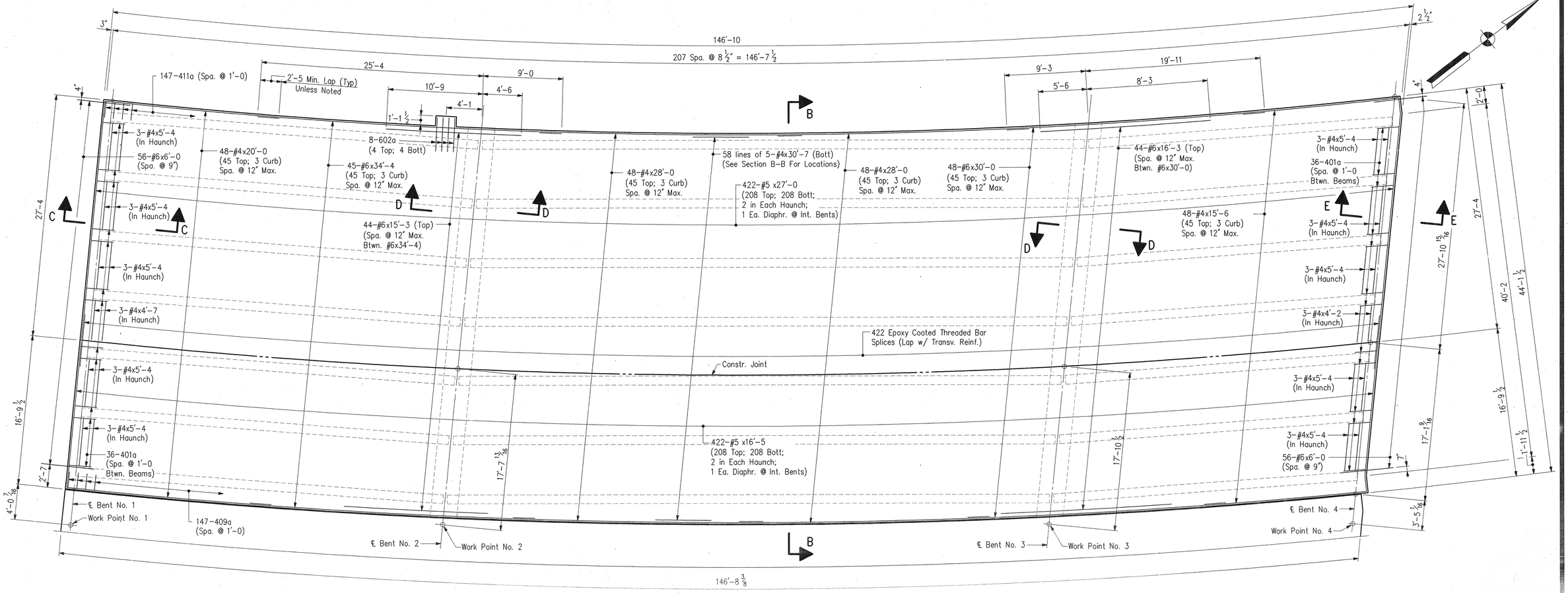

PLAN

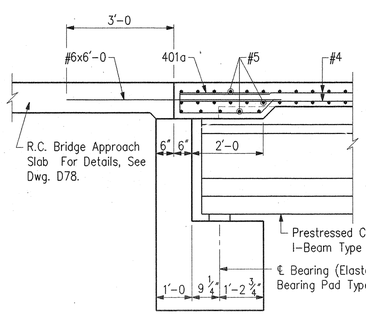

SECTION C-C

Scale: 1/2" = 1'-0

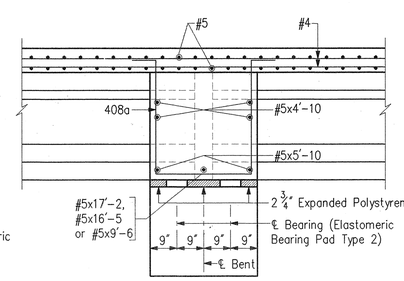

SECTION D-D

Scale: 1/2" = 1'-0

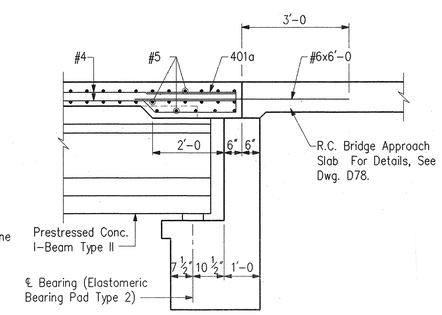

SECTION E-E

Scale: 1/2" = 1'-0

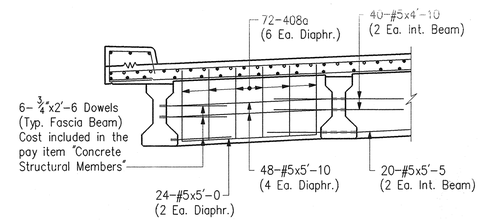

TYPICAL DIAPHRAGM @ BENTS NO. 2 AND NO.3

Scale: 1/2" = 1'-0

NOTES:

- For reinforcing bar notes and bar bending details see Bridge Standard C1.
- All reinforcing steel in Superstructure and Concrete Barrier Railing shall be epoxy coated.
- All concrete to be class C.
- For Section "B-B", Bent Bars, and Bill of Materials, see Dwg. D72.
- The top reinforcing in the deck shall be securely tied to the deck forms or beams to prevent lifting during concrete placement.
- For concrete railing details, see Dwg. D76.
- For floor details of northbound lanes, see Dwg. D70.
- For pour diagram, see Dwg. D72.
- Sequence of pours to be made in order of pour numbers. All superstructure construction joints are optional except as noted, and pours may be made continuous provided the pour terminates at a construction joint indicated on the plans. The contractor may change the width of pours, sequence of pours, or location of construction joints subject to the approval of the engineer.
- The contractor will have the option of using permanent deck forms for the concrete bridge floor in lieu of removable forms.
- Suitable restraint shall be provided to prevent the rotation of the outside beams from construction loads such as finishing machine, forms, etc.
- All transverse reinforcing shall be placed parallel to the ℄ of bents.
- For bridge lighting details, see Bridge Standard R2B.
- For location of Interior diaphragms, see framing plan on Dwg. D69.
- For location of workpoints, see Dwg. D57.

FLOOR DETAILS - SOUTHBOUND LANES

INDIANA DEPARTMENT OF TRANSPORTATION

ST. JOSEPH COUNTY

SCALE:- 3/16" = 1'-0 Unless Otherwise Noted

DATE:- March 29, 1993

David T. Lash

DRAWING:- D71 OF 85 SHEET:- 76 OF 131

PROJECT:- ST/206-6( ) STATION:-

BRIDGE CONTRACT NO. B-20757

BRIDGE FILE:- 23-7i-4994B

DAVID T. LASH REGISTERED No. 20470 STATE OF INDIANA PROFESSIONAL ENGINEER

DESIGNED	DPJ	C'K'D	DDC
DRAWN	TWL	C'K'D	DDC
TRACED		C'K'D	

C:\20BR\4994\4994FLSB OPER: twl TL2R 0166 3/25/1993 16:18:50

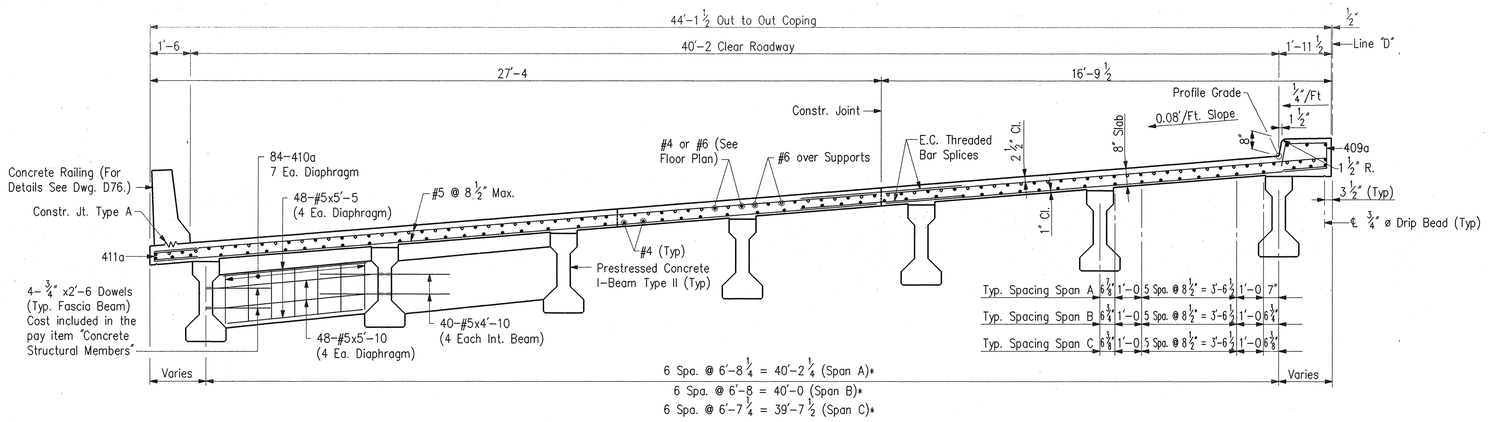

RADIAL SECTION B-B

Scale: 3/8" = 1'-0

* Approximate Beam spacing given perpendicular to the beam centerlines in each span. For exact spacing, see beam layout on Dwg. D69.

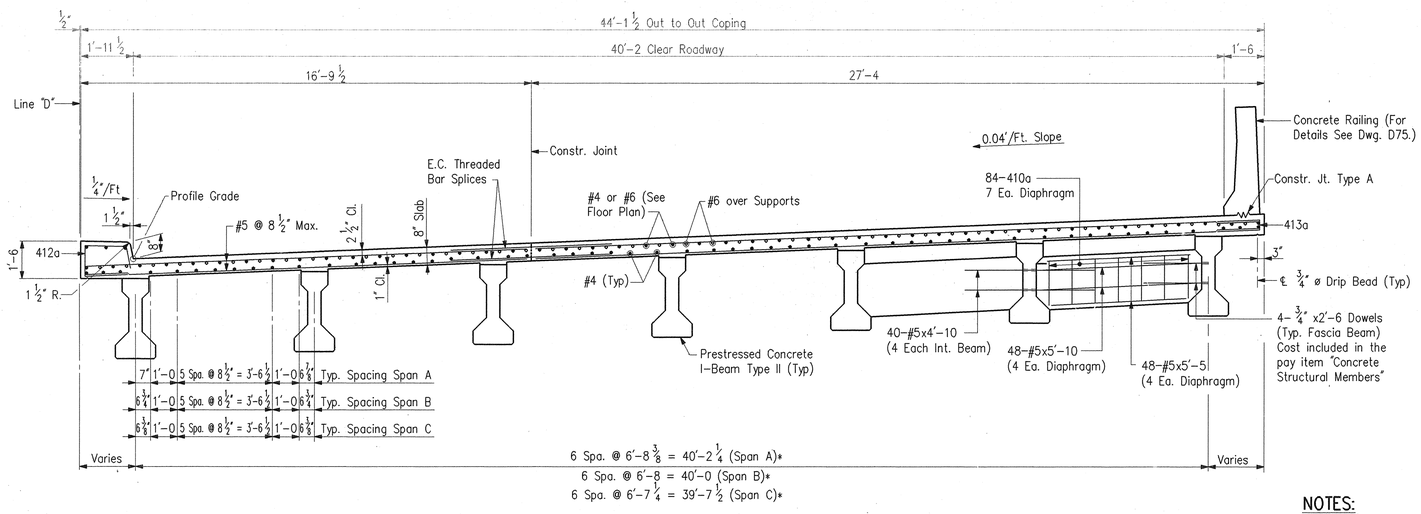

RADIAL SECTION A-A

Scale: 3/8" = 1'-0

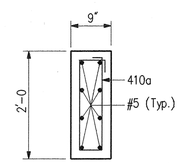

TYPICAL INTERIOR DIAPHRAM

No Scale

NOTES:

- For reinforcing bar notes and bar bending details see Bridge Standard C1.
- All reinforcing steel in Superstructure and Concrete Barrier Railing shall be epoxy coated.
- All reinforcing steel to be grade 60 reinforcing.
- All Concrete in superstructure shall be Class "C"
- For location of section A-A see Dwg. D70.
- For location of section B-B see Dwg. D71.
- The top reinforcing in the deck shall be securely tied to the deck forms or beams to prevent lifting during concrete placement.
- For concrete railing details, see Dwg. D75-D76.
- For floor details of northbound lanes, see Dwg. D70.
- For floor details of southbound lanes, see Dwg. D71.
- Sequence of pours to be made in order of pour numbers. All superstructure construction joints are optional except as noted, and pours may be made continuous provided the pour terminates at a construction joint indicated on the plans. The contractor may change the width of pours, sequence of pours, or location of construction joints subject to the approval of the engineer.
- The contractor will have the option of using permanent deck forms for the concrete bridge floor in lieu of removable forms.
- Suitable restraint shall be provided to prevent the rotation of the outside beams from construction loads such as finishing machine, forms, etc.
- All transverse reinforcing shall be placed parallel to the ℄ of bents.
- For bridge lighting details, see Bridge Standard R2B.
- For location of Interior diaphragms, see framing plan on Dwg. D69.
- For temporary supports, see Dwg. D59.

BILL OF MATERIALS
(SOUTHBOUND LANES)

REINFORCING STEEL

SIZE & MARK	No. OF BARS	LENGTH	WEIGHT (LBS.)
EPOXY COATED REINFORCING			
602a	8	4'-6"	
#6	45	34'-4"	
#6	48	30'-0"	
#6	44	16'-3"	
#6	44	15'-3"	
#6	112	6'-0"	
TOTAL #6 BARS			7629
#5	422	27'-0"	
#5	422	16'-5"	
#5	96	5'-10"	
#5	68	5'-5"	
#5	24	5'-0"	
#5	80	4'-10"	
TOTAL #5 BARS			20606
411a	147	3'-7"	
410a	84	4'-10"	
409a	147	5'-0"	
408a	72	10'-6"	
401a	72	6'-0"	
#4	290	30'-7"	
#4	96	28'-0"	
#4	48	20'-0"	
#4	48	15'-6"	
#4	30	5'-4"	
#4	3	4'-7"	
#4	3	4'-2"	
TOTAL #4 BARS			10891
TOTAL EPOXY REINF.			39126

CONCRETE

Concrete, C In Superstructure		
Pour No. 1	19.7 Cys	
Pour No. 2	28.5 Cys	
Pour No. 3	15.4 Cys	
Pour No. 4	9.1 Cys	
Pour No. 5	9.1 Cys	
Pour No. 6	28.7 Cys	
Pour No. 7	41.5 Cys	
Pour No. 8	21.8 Cys	
Pour No. 9	14.4 Cys	
Pour No. 10	14.4 Cys	
Total Concrete, C In Superstructure		202.6 Cys

MISCELLANEOUS

Surface Seal	6547 Sft.
Epoxy Coated Threaded Bar Splices	422 Each

BILL OF MATERIALS
(NORTHBOUND LANES)

REINFORCING STEEL

SIZE & MARK	No. OF BARS	LENGTH	WEIGHT (LBS.)
EPOXY COATED REINFORCING			
602a	8	4'-6"	
#6	48	34'-4"	
#6	48	30'-0"	
#6	44	16'-3"	
#6	44	15'-3"	
#6	110	6'-0"	
TOTAL #6 BARS			7765
#5	422	27'-0"	
#5	422	16'-5"	
#5	96	5'-10"	
#5	68	5'-5"	
#5	24	5'-0"	
#5	80	4'-10"	
TOTAL #5 BARS			20606
413a	147	3'-7"	
412a	147	5'-0"	
410a	84	4'-10"	
408a	72	10'-6"	
401a	72	6'-0"	
#4	270	30'-7"	
#4	96	28'-0"	
#4	48	20'-0"	
#4	48	15'-6"	
#4	30	5'-0"	
#4	3	4'-2"	
#4	3	4'-0"	
TOTAL #4 BARS			10474
TOTAL EPOXY REINF.			38845

CONCRETE

Concrete, C In Superstructure		
Pour No. A	20.0 Cys	
Pour No. B	29.0 Cys	
Pour No. C	15.6 Cys	
Pour No. D	9.2 Cys	
Pour No. E	9.2 Cys	
Pour No. F	28.9 Cys	
Pour No. G	41.4 Cys	
Pour No. H	22.3 Cys	
Pour No. J	14.6 Cys	
Pour No. K	14.7 Cys	
Total Concrete, C In Superstructure		204.9 Cys

MISCELLANEOUS

Surface Seal	6569 Sft.
Epoxy Coated Threaded Bar Splices	422 Each

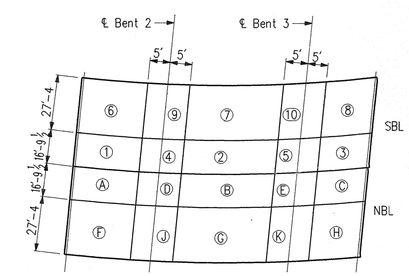

CONCRETE POUR DIAGRAM

No Scale

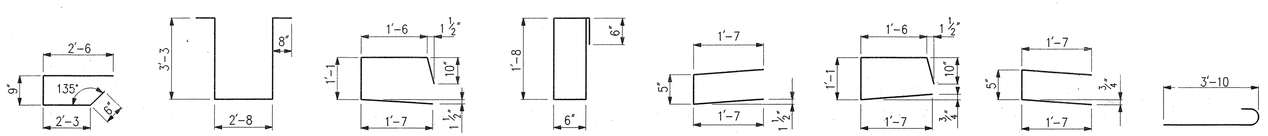

401a x 6'-0 | 408a x 10'-6 | 409a x 5'-0 | 410a x 4'-10 | 411a x 3'-7 | 412a x 5'-0 | 413a x 3'-7 | 602a x 4'-6

DESIGNED	DPJ	C'K'D	DDC
DRAWN	TWL	C'K'D	DDC
TRACED		C'K'D	

FLOOR DETAILS - NORTHBOUND AND SOUTHBOUND

INDIANA DEPARTMENT OF TRANSPORTATION

ST. JOSEPH COUNTY

SCALE:- 3/8" = 1'-0 UNLESS Otherwise Noted DATE:- March 29, 1993

David T. Lash

DRAWING:- D72 OF 85 SHEET:- 77 OF 131

PROJECT:- ST/206-6( ) STATION:-

BRIDGE CONTRACT NO. B-20757

BRIDGE FILE:- 23-71-4994B

DAVID T. LASH REGISTERED No. 20470 STATE OF INDIANA PROFESSIONAL ENGINEER

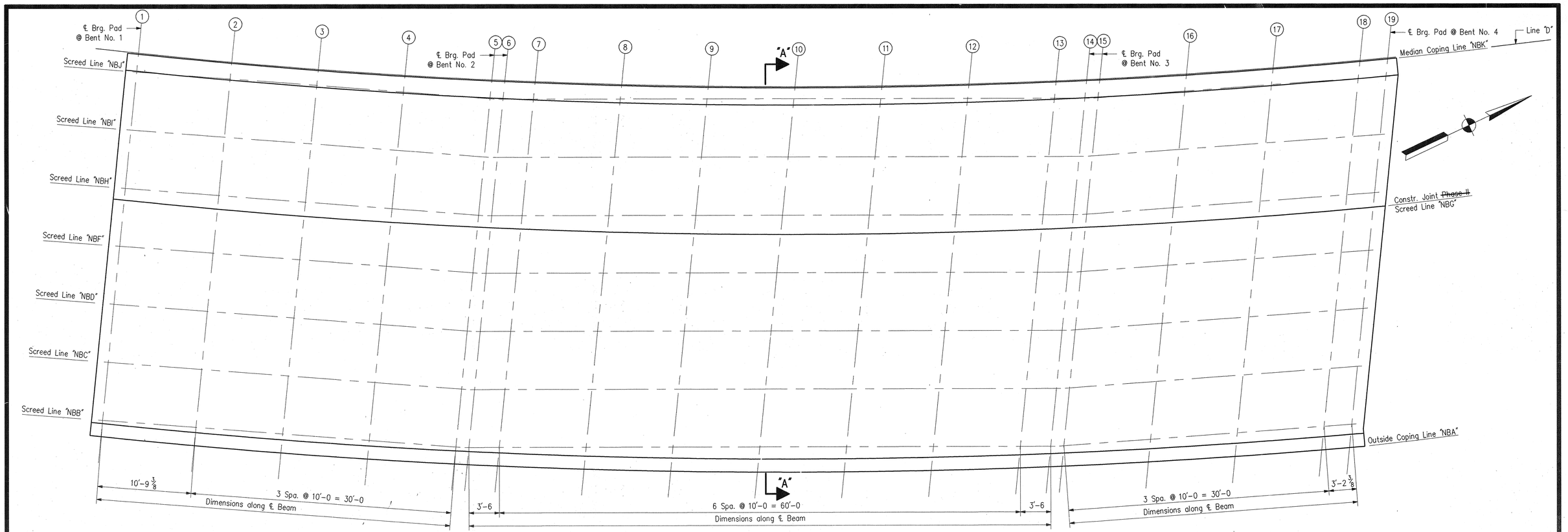

SCREED PLAN

Scale: 3/16" = 1'-0

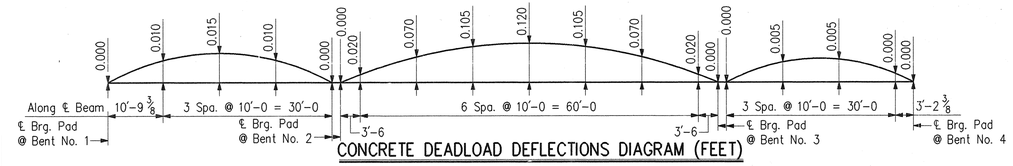

CONCRETE DEADLOAD DEFLECTIONS DIAGRAM (FEET)

No Scale

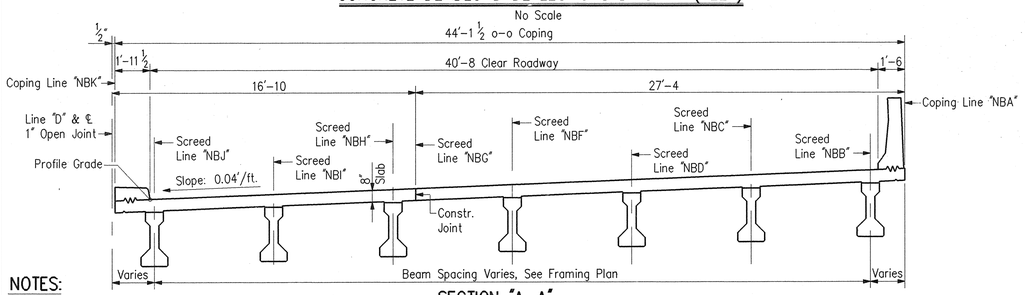

SECTION "A-A"

Scale: 1/4" = 1'-0

SCREED TABLE

LINE	SCREED POINT NUMBER	1	2	3	4	5	6	7	8	9	10	11	12	13	14	15	16	17	18	19
"NBA"	ELEVATION – TOP OF SCREED	714.850	714.730	714.615	714.490	714.365	714.345	714.325	714.255	714.170	714.065	713.930	713.775	713.605	713.545	713.525	713.410	713.290	713.165	713.130
	ELEVATION – TOP OF BEAM																			
	DISTANCE TOP OF SCREED TO TOP OF COPING FORM																			
"NBB"	ELEVATION – TOP OF SCREED	714.775	714.645	714.530	714.405	714.285	714.265	714.235	714.150	714.055	713.945	713.810	713.660	713.505	713.445	713.425	713.300	713.180	713.055	713.015
	ELEVATION – TOP OF BEAM																			
	DISTANCE TOP OF SCREED TO TOP OF BEAM																			
"NBC"	ELEVATION – TOP OF SCREED	714.505	714.380	714.260	714.135	714.010	713.995	713.965	713.880	713.780	713.670	713.535	713.385	713.225	713.170	713.150	713.025	712.900	712.775	714.740
	ELEVATION – TOP OF BEAM																			
	DISTANCE TOP OF SCREED TO TOP OF BEAM																			
"NBD"	ELEVATION – TOP OF SCREED	714.240	714.110	713.990	713.865	713.740	713.720	713.690	713.605	713.510	713.395	713.260	713.110	712.950	712.890	712.875	712.750	712.620	712.495	712.460
	ELEVATION – TOP OF BEAM																			
	DISTANCE TOP OF SCREED TO TOP OF BEAM																			
"NBF"	ELEVATION – TOP OF SCREED	713.970	713.840	713.720	713.595	713.470	713.450	713.420	713.330	713.235	713.120	712.985	712.835	712.675	712.615	712.600	712.470	712.345	712.220	712.180
	ELEVATION – TOP OF BEAM																			
	DISTANCE TOP OF SCREED TO TOP OF BEAM																			
"NBG"	ELEVATION – TOP OF SCREED	713.760	713.635	713.515	713.385	713.250	713.235	713.210	713.135	713.050	712.940	712.800	712.640	712.465	712.400	712.385	712.265	712.140	712.010	711.970
	ELEVATION – TOP OF BEAM																			
	DISTANCE TOP OF SCREED TO TOP OF FORM																			
"NBH"	ELEVATION – TOP OF SCREED	713.705	713.570	713.450	713.325	713.195	713.175	713.145	713.060	712.960	712.845	712.710	712.555	712.395	712.340	712.320	712.195	712.065	711.940	711.905
	ELEVATION – TOP OF BEAM																			
	DISTANCE TOP OF SCREED TO TOP OF BEAM																			
"NBI"	ELEVATION – TOP OF SCREED	713.425	713.305	713.180	713.050	712.925	712.905	712.875	712.785	712.685	712.570	712.435	712.280	712.120	712.060	712.045	711.915	711.790	711.660	711.625
	ELEVATION – TOP OF BEAM																			
	DISTANCE TOP OF SCREED TO TOP OF BEAM																			
"NBJ"	ELEVATION – TOP OF SCREED	713.170	713.035	712.910	712.780	712.655	712.635	712.605	712.510	712.410	712.300	712.160	712.005	711.840	711.785	711.765	711.635	711.510	711.380	711.345
	ELEVATION – TOP OF BEAM																			
	DISTANCE TOP OF SCREED TO TOP OF BEAM																			
"NBK"	ELEVATION – TOP OF SCREED	713.090	712.960	712.840	712.710	712.570	712.550	712.530	712.450	712.360	712.245	712.105	711.945	711.845	711.700	711.680	711.560	711.435	711.300	711.260
	ELEVATION – TOP OF BEAM																			
	DISTANCE TOP OF SCREED TO TOP OF COPING FORM																			

NOTES:

- Screed elevations shall be determined by adding the Concrete Deadload Deflections to the final concrete elevations at all screed points.
- Take elevations at all screed points on top of beam, enter the elevations below the tabulated elevations in the Screed Table, subtract these elevations from the tabulated elevations and use the resulting dimensions as the height for the setting of the screed or coping form above that point. These dimensions remain unchanged regardless of how much or in what order the concrete is poured.
- No concrete is to be poured until the above operation is complete.
- DO NOT set screeds or coping forms by leveling.

NORTHBOUND SCREEDS

INDIANA DEPARTMENT OF TRANSPORTATION

ST. JOSEPH COUNTY

SCALE:- As Noted DATE:- March 29, 1993

David T. Lash

DRAWING:- D73 OF 85 SHEET:- 78 OF 131

PROJECT:- ST/206-6( ) STATION:-

BRIDGE CONTRACT NO. B-20757

BRIDGE FILE:- 23-71-4994B

DAVID T. LASH REGISTERED No. 20470 STATE OF INDIANA PROFESSIONAL ENGINEER

DESIGNED	AJW	C'K'D	DDC
DRAWN	AJW	C'K'D	DDC
TRACED		C'K'D	

C:\20BR\4994\4994NBSD OPER: twl TERM:0166 3/24/1993 12:3:37

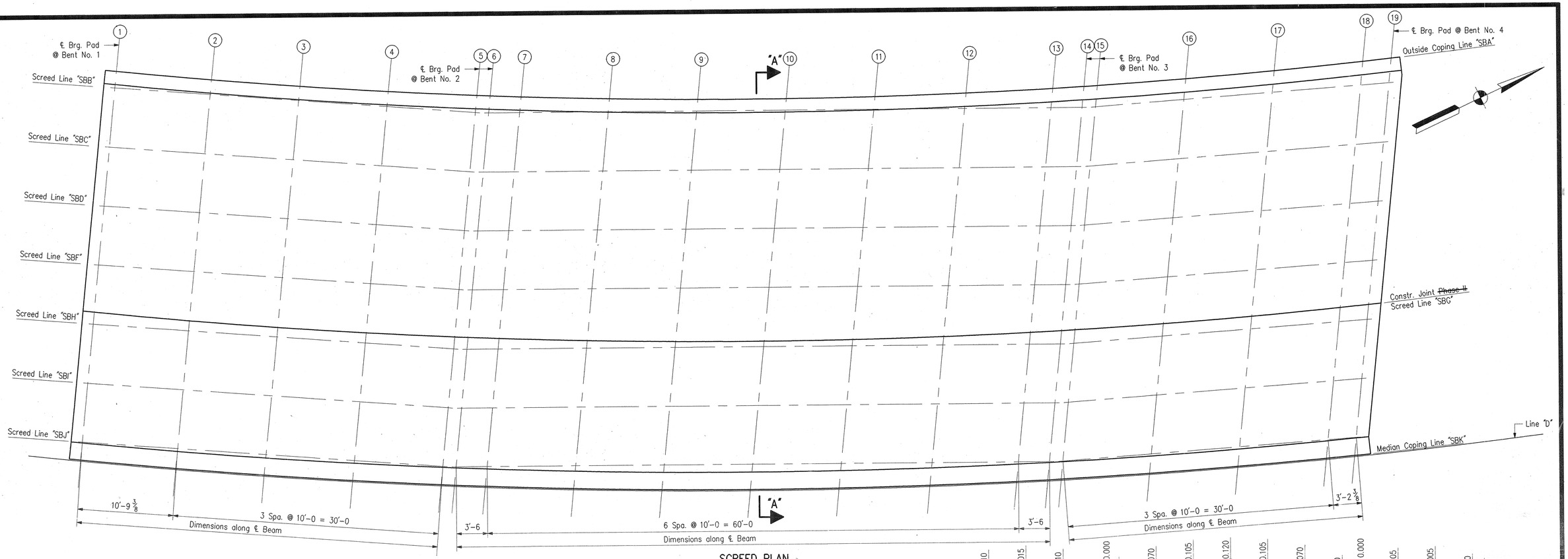

SCREED PLAN

Scale: 3/16" = 1'-0

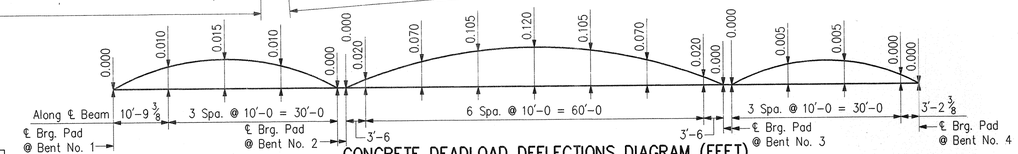

CONCRETE DEADLOAD DEFLECTIONS DIAGRAM (FEET)

No Scale

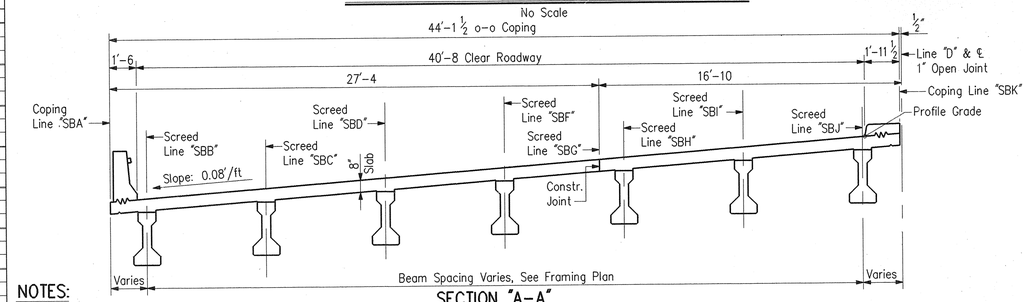

SECTION "A-A"

Scale: 1/4" = 1'-0

SCREED TABLE

LINE	SCREED POINT NUMBER	1	2	3	4	5	6	7	8	9	10	11	12	13	14	15	16	17	18	19
"SBA"	ELEVATION – TOP OF SCREED	709.800	709.660	709.530	709.390	709.245	709.225	709.200	709.115	709.015	708.890	708.740	708.570	708.385	708.315	708.295	708.165	708.030	707.890	707.845
	ELEVATION – TOP OF BEAM																			
	DISTANCE TOP OF SCREED TO TOP OF COPING FORM																			
"SBB"	ELEVATION – TOP OF SCREED	709.945	709.795	709.660	709.525	709.400	709.380	709.340	709.230	709.115	708.995	708.855	708.710	708.560	708.505	708.490	708.355	708.225	708.105	708.070
	ELEVATION – TOP OF BEAM																			
	DISTANCE TOP OF SCREED TO TOP OF BEAM																			
"SBC"	ELEVATION – TOP OF SCREED	710.480	710.330	710.195	710.065	709.940	709.920	709.880	709.770	709.660	709.540	709.400	709.255	709.105	709.050	709.035	708.900	708.770	708.650	708.615
	ELEVATION – TOP OF BEAM																			
	DISTANCE TOP OF SCREED TO TOP OF BEAM																			
"SBD"	ELEVATION – TOP OF SCREED	711.015	710.865	710.735	710.605	710.480	710.460	710.420	710.315	710.200	710.080	709.945	709.795	709.645	709.595	709.575	709.440	709.315	709.190	709.155
	ELEVATION – TOP OF BEAM																			
	DISTANCE TOP OF SCREED TO TOP OF BEAM																			
"SBF"	ELEVATION – TOP OF SCREED	711.555	711.405	711.270	711.140	711.020	711.000	710.960	710.855	710.740	710.625	710.485	710.340	710.190	710.135	710.120	709.985	709.855	709.735	709.700
	ELEVATION – TOP OF BEAM																			
	DISTANCE TOP OF SCREED TO TOP OF BEAM																			
"SBG"	ELEVATION – TOP OF SCREED	711.980	711.850	711.725	711.590	711.450	711.430	711.405	711.325	711.230	711.115	710.970	710.805	710.625	710.560	710.540	710.415	710.285	710.150	710.105
	ELEVATION – TOP OF BEAM																			
	DISTANCE TOP OF SCREED TO TOP OF FORM																			
"SBH"	ELEVATION – TOP OF SCREED	712.090	711.940	711.810	711.680	711.560	711.540	711.500	711.395	711.285	711.165	711.030	710.880	710.735	710.680	710.660	710.530	710.400	710.275	710.240
	ELEVATION – TOP OF BEAM																			
	DISTANCE TOP OF SCREED TO TOP OF BEAM																			
"SBI"	ELEVATION – TOP OF SCREED	712.625	712.475	712.345	712.220	712.100	712.080	712.040	711.935	711.825	711.705	711.570	711.425	711.275	711.225	711.205	711.070	710.940	710.820	710.785
	ELEVATION – TOP OF BEAM																			
	DISTANCE TOP OF SCREED TO TOP OF BEAM																			
"SBJ"	ELEVATION – TOP OF SCREED	713.160	713.015	712.885	712.760	712.640	712.620	712.580	712.475	712.365	712.250	712.115	711.965	711.820	711.765	711.750	711.615	711.485	711.360	711.325
	ELEVATION – TOP OF BEAM																			
	DISTANCE TOP OF SCREED TO TOP OF BEAM																			
"SBK"	ELEVATION – TOP OF SCREED	713.325	713.195	713.075	712.945	712.805	712.785	712.760	712.715	712.595	712.480	712.340	712.180	712.000	711.935	711.915	711.795	711.670	711.535	711.495
	ELEVATION – TOP OF BEAM																			
	DISTANCE TOP OF SCREED TO TOP OF COPING FORM																			

NOTES:

- Screed elevations shall be determined by adding the Concrete Deadload Deflections to the final concrete elevations at all screed points.
- Take elevations at all screed points on top of beam, enter the elevations below the tabulated elevations in the Screed Table, subtract these elevations from the tabulated elevations and use the resulting dimensions as the height for the setting of the screed or coping form above that point. These dimensions remain unchanged regardless of how much or in what order the concrete is poured.
- No concrete is to be poured until the above operation is complete.
- DO NOT set screeds or coping forms by leveling.

SOUTHBOUND SCREEDS

INDIANA DEPARTMENT OF TRANSPORTATION

ST. JOSEPH COUNTY

SCALE:- As Noted

DATE:- March 29, 1993

David T. Lash

DRAWING:- D74 OF 85 SHEET:- 79 OF 131

PROJECT:- ST/206-6( ) STATION:-

BRIDGE CONTRACT NO. B-20757

BRIDGE FILE:- 23-71-4994B

DESIGNED AJW C'K'D DDC
DRAWN AJW C'K'D DDC
TRACED C'K'D

C:\20BR\4994\ 4994SBSD OPER: twl TERM:0166 3/24/1993 12/31

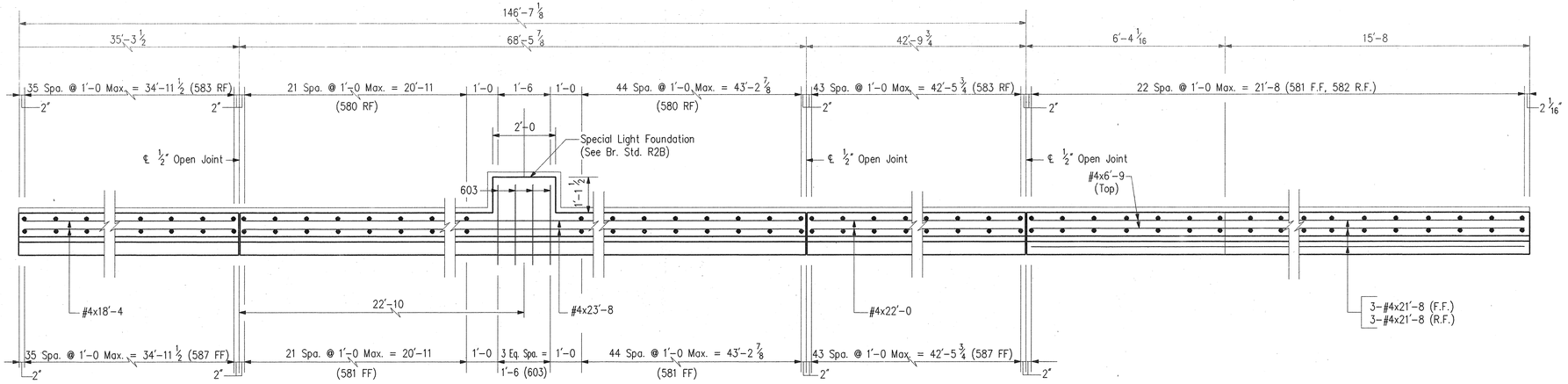

PLAN

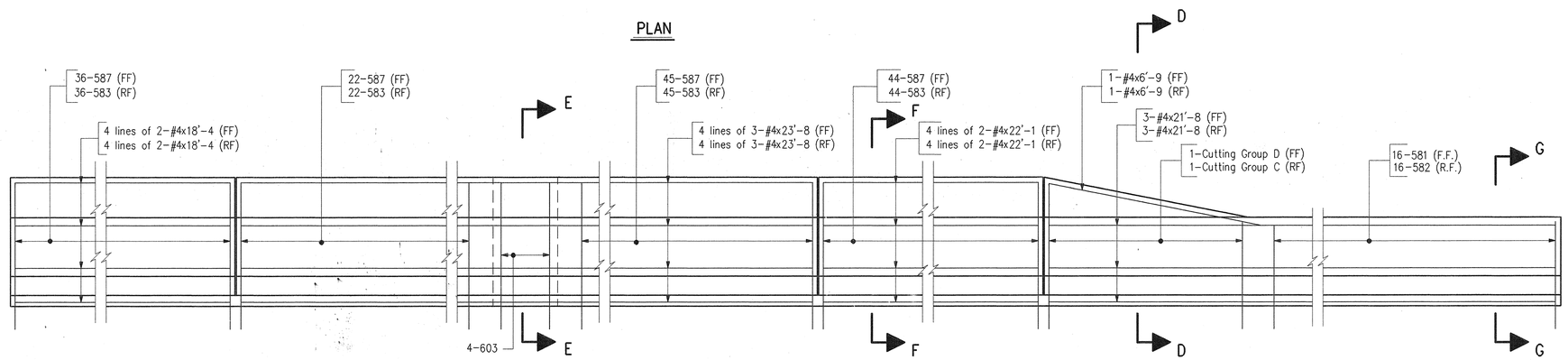

ELEVATION

BILL OF MATERIALS

REINFORCING STEEL			
SIZE & MARK	No. OF BARS	LENGTH	WEIGHT (LBS.)
EPOXY COATED REINFORCING			
603	4	11'-8"	
TOTAL #6 BARS			70
591	4	8'-9"	
590	4	9'-1"	
589	7	9'-1"	
588	7	8'-9"	
587	147	5'-2"	
583	147	5'-0"	
581	16	3'-11"	
580	16	3'-9"	
TOTAL #5 BARS			1891
#4	24	23'-8"	
#4	16	22'-1"	
#4	16	18'-4"	
#4	6	21'-8"	
#4	2	14'-9"	
#4	6	7'-9"	
#4	2	6'-9"	
TOTAL #4 BARS			907
TOTAL EPOXY REINF.			2868

MISCELLANEOUS	
RAILING, CONCRETE, C	169 LFT
BARRIER DELINEATORS	11 EACH
SURFACE SEAL	1842 SFT
MASONRY COATING	1842 SFT

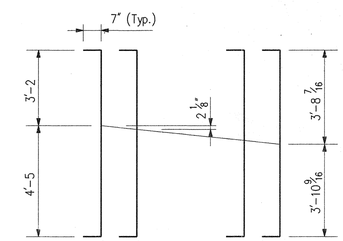

CUTTING GROUP D

4-591 x 8'-9
(3 Spa. @ 1'-0 Max.)

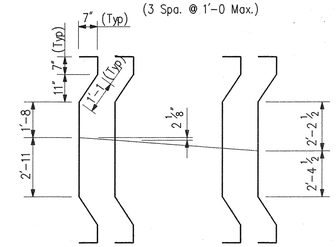

CUTTING GROUP C

4-590 x 9'-1
(3 Spa. @ 1'-0 Max.)

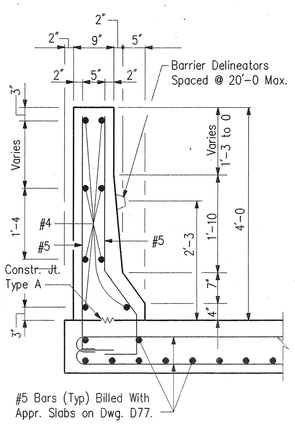

SECTION D-D

Scale: 3/4"=1'-0

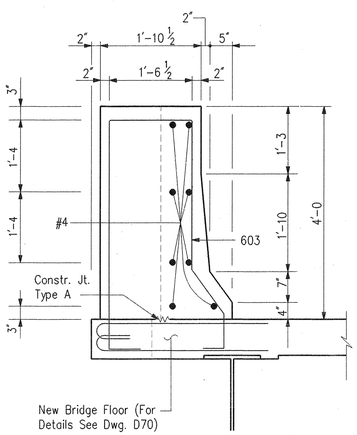

SECTION E-E

Scale: 3/4"=1'-0

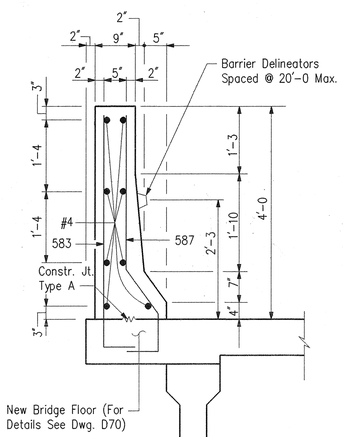

SECTION F-F

Scale: 3/4"=1'-0

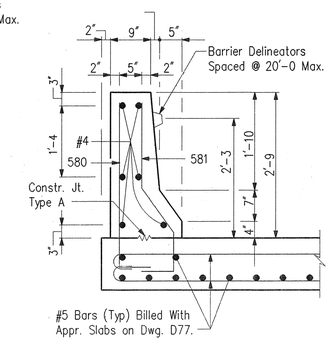

SECTION G-G

Scale: 3/4"=1'-0

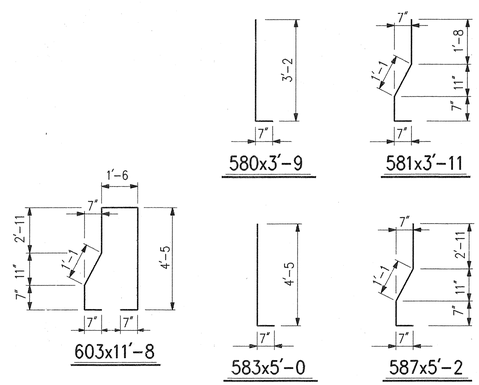

NOTES:

- For Reinforcing Bar Notes & Bar Bending Details, See Br. Std. C1.
- For Guard Rail Connection Details, See Rd. Std. T1.
- Reinforcing Steel in Concrete Railing to be Epoxy Coated.
- All Reinforcing Steel to be grade 60 reinforcing.
- Concrete in Concrete Railing to be Class 'C'.
- For Details of Approach Slabs, See Dwg. D77.
- Min. Lap for #4 bar is 1'-7
- Concrete Railing is on a Horizontal Curve. See Tie-Up Diagram, Dwg. D57.
- All surfaces to be constructed perpendicular to deck, except top surface for light post, which is to be constructed level.
- The exterior face of the concrete railing shall be textured. See Dwg. D80.

CONCRETE RAILING DETAILS - NORTHBOUND

INDIANA DEPARTMENT OF TRANSPORTATION

ST. JOSEPH COUNTY

SCALE:- 1/2"=1'-0, unless otherwise noted

DATE:- March 29, 1993

David T. Lash

DAVID T. LASH REGISTERED No. 20470 STATE OF INDIANA PROFESSIONAL ENGINEER

DRAWING:- D75 OF 85 SHEET:- 80 OF 131

PROJECT:- ST/206-6( ) STATION:-

BRIDGE CONTRACT NO. B-20757

BRIDGE FILE:- 23-71-4994B

DESIGNED	PEB	C'K'D	TWL
DRAWN	PEB	C'K'D	TWL
TRACED		C'K'D	

C:\92100\4994\4994RAL2 OPER: AMJ TERM: 0165 3/24/1993 10:0:40

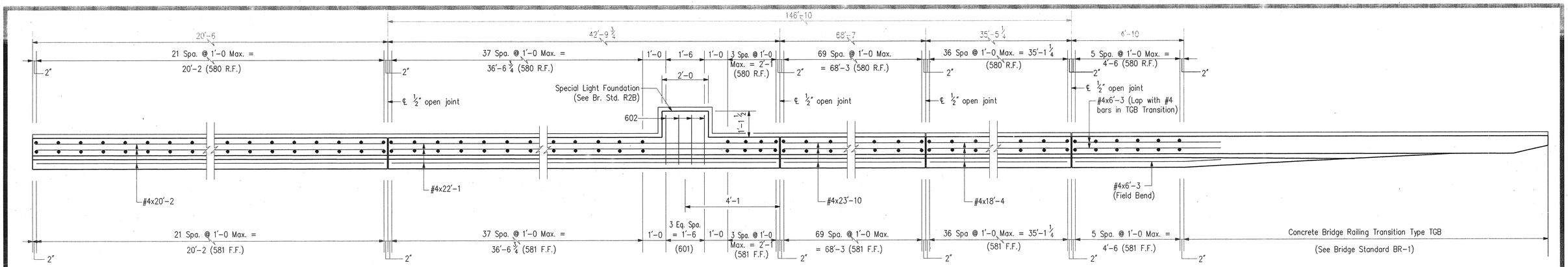

PLAN

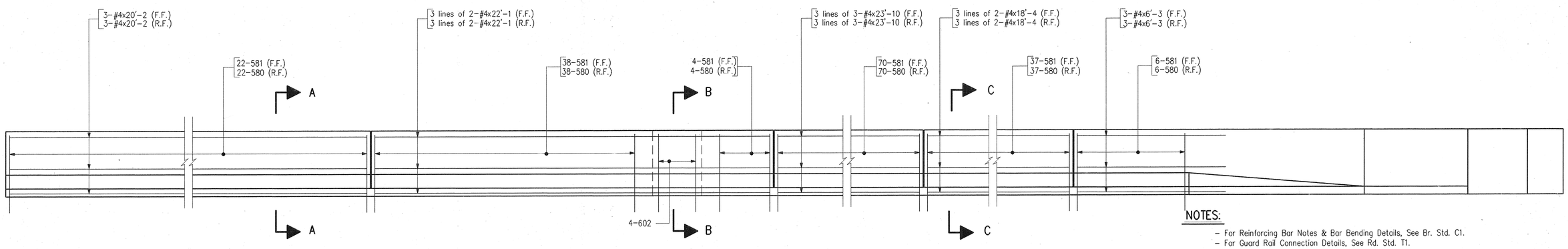

ELEVATION

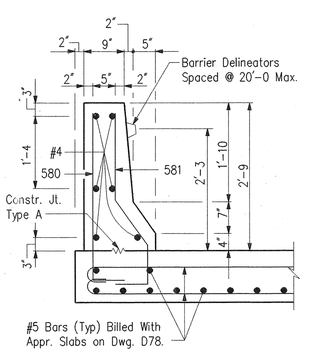

SECTION A-A

Scale: 3/4"=1'-0

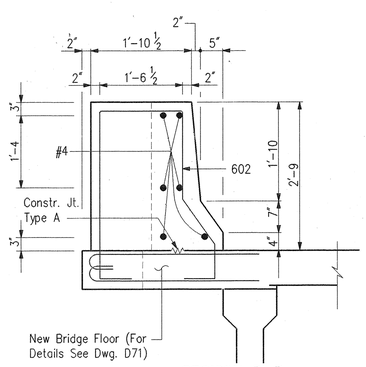

SECTION B-B

Scale: 3/4"=1'-0

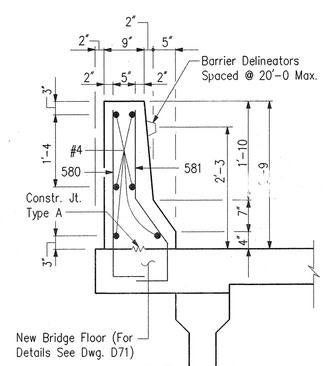

SECTION C-C

Scale: 3/4"=1'-0

BILL OF MATERIALS

REINFORCING STEEL			
SIZE & MARK	No. OF BARS	LENGTH	WEIGHT (LBS.)
EPOXY COATED REINFORCING			
602	4	9'-2"	
TOTAL #6 BARS			55
581	177	3'-11"	
580	177	3'-9"	
TOTAL #5 BARS			1415
#4	18	23'-10"	
#4	12	22'-1"	
#4	6	20'-2"	
#4	12	18'-4"	
#4	6	6'-3"	
TOTAL #4 BARS			716
TOTAL EPOXY REINF.			2186
MISCELLANEOUS			
RAILING, CONCRETE, C			172 LFT.
BARRIER DELINEATORS			10 EACH
SURFACE SEAL			1988 SFT
MASONRY COATING			1988 SFT
CONC. BRIDGE RAIL TRANSITION, TYPE TGB			1 EACH

NOTES:

- For Reinforcing Bar Notes & Bar Bending Details, See Br. Std. C1.
- For Guard Rail Connection Details, See Rd. Std. T1.
- Reinforcing Steel in Concrete Railing to be Epoxy Coated.
- All Reinforcing Steel to be grade 60 reinforcing.
- Concrete in Concrete Railing to be Class "C".
- For Details of Approach Slabs, See Dwg. D78.
- Min. Lap for #4 bar is 1'-7
- Concrete Railing is on a Horizontal Curve. See Tie-Up Diagram, Dwg. D57.
- All surfaces to be constructed perpendicular to deck, except top surface for light post, which is to be constructed level.
- The exterior face of the concrete railing shall be textured. See Dwg. D80.

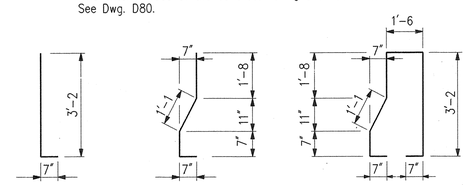

CONCRETE RAILING DETAILS-SOUTHBOUND

INDIANA DEPARTMENT OF TRANSPORTATION

ST. JOSEPH COUNTY

SCALE:- 1/2"=1'-0, UNLESS otherwise noted

DATE:- March 29, 1993

David T Lash

DRAWING:- D76 OF 85 SHEET:- 81 OF 131

PROJECT:- ST/206-6( ) STATION:-

BRIDGE CONTRACT NO. B-20757

BRIDGE FILE:- 23-71-4994B

DAVID T. LASH REGISTERED No. 20470 STATE OF INDIANA PROFESSIONAL ENGINEER

DESIGNED PEB C'K'D TWL
DRAWN PEB C'K'D TWL
TRACED C'K'D

C:\92100\4994\4994RAL1 OPER: AMJ TERM:0165 3/24/1993 9:19:2

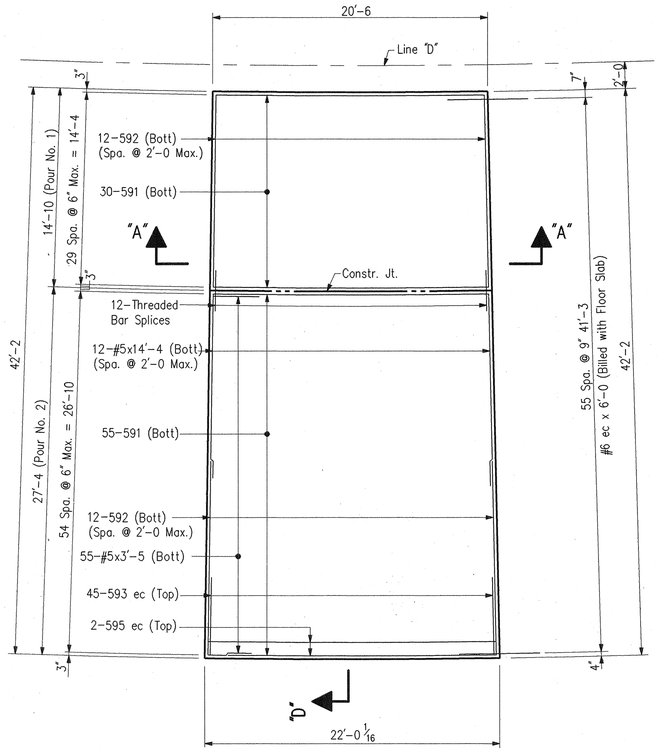

PLAN – SOUTH APPROACH NORTHBOUND LANES

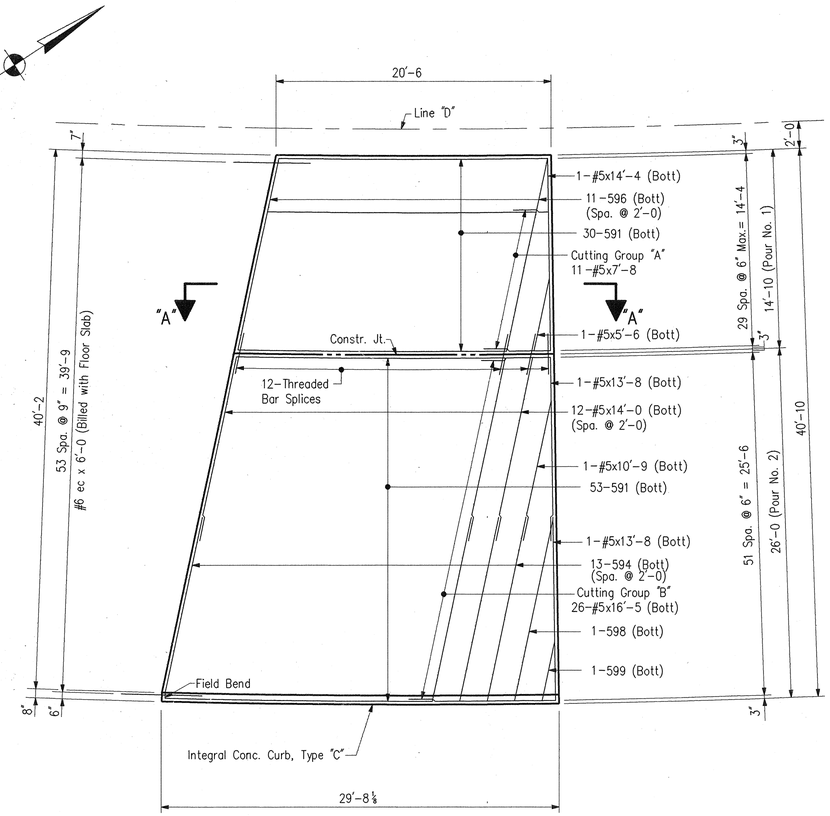

PLAN – NORTH APPROACH NORTHBOUND LANES

BILL OF MATERIALS
SOUTH APPROACH NORTHBOUND LANES

REINFORCING STEEL			
SIZE & MARK	No. OF BARS	LENGTH	WEIGHT (LBS.)
EPOXY COATED REINFORCING			
595	2	22'-1"	
593	45	6'-7"	
TOTAL #5 BARS			355
TOTAL EPOXY REINF.			355
PLAIN REINFORCING			
592	24	14'-11"	
591	85	20'-7"	
#5	12	14'-4"	
#5	55	3'-5"	
TOTAL #5 BARS			2574
TOTAL PLAIN REINF.			2574
CONCRETE			
10" Reinforced Concrete Pavement			
Pour No. 1		34 Sys.	
Pour No. 2		65 Sys.	
Total 10" Reinforced Concrete Pavement			99 Sys.
MISCELLANEOUS			
Threaded Bar Splices			12 Each
Type "O" Compacted Aggregate Base			33 Tons
* Pavement Remove			92 Sys.

* Includes Removal of Integral Concrete Curb.

BILL OF MATERIALS
NORTH APPROACH NORTHBOUND LANES

REINFORCING STEEL			
SIZE & MARK	No. OF BARS	LENGTH	WEIGHT (LBS.)
PLAIN REINFORCING			
599	1	6'-1"	
594	13	14'-7"	
598	1	14'-3"	
596	11	15'-2"	
591	83	20'-7"	
#5	26	16'-5"	
#5	1	14'-4"	
#5	12	14'-0"	
#5	2	13'-8"	
#5	1	10'-9"	
#5	11	7'-8"	
#5	1	5'-6"	
TOTAL #5 BARS			2944
TOTAL PLAIN REINF.			2944
CONCRETE			
10" Reinforced Concrete Pavement			
Pour No. 1		37 Sys.	
Pour No. 2		78 Sys.	
Total 10" Reinforced Concrete Pavement			115 Sys.
MISCELLANEOUS			
Threaded Bar Splices			12 Each
Type "O" Compacted Aggregate Base			38 Tons
** Pavement Remove			113 Sys.
Integral Concrete Curb, Type "C"			30 LFt

** Includes Removal For Relief Joint and Removal of Integral Concrete Curb.

NOTES

- For reinforcing bar notes and bar bending details, see Bridge Standard C-1.
- ec Indicates epoxy coated reinforcing steel.
- Reinforcing Steel to be grade 60 reinforcing.
- Min. Lap for #5 Bar is 1'-9.
- Removal of existing curb on approach slabs to be included in the cost of Pavement Removal.
- For Section D, see Dwg. D75.

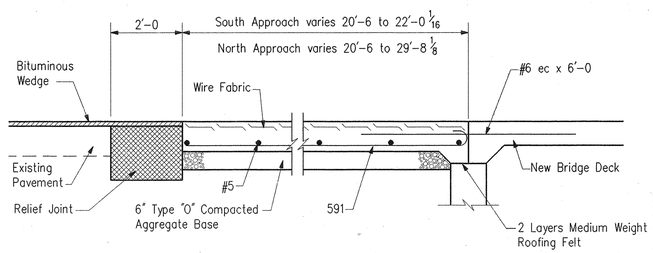

SECTION A–A

Scale: 1/2" = 1'-0

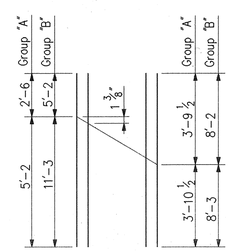

CUTTING GROUPS

"A" – 11–#5x7'-8

"B" – 26–#5x16'-5

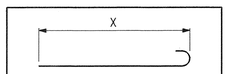

MARK	X	LENGTH
591	20'-0	20'-7
592	14'-4	14'-11
593	6'-0	6'-7
594	14'-0	14'-7
595	21'-6	22'-1
596	14'-7	15'-2
598	13'-8	14'-3
599	4'-6	6'-1

R.C. APPROACH SLAB DETAILS – NORTHBOUND

INDIANA DEPARTMENT OF TRANSPORTATION

ST. JOSEPH COUNTY

SCALE:- 3/16"=1'-0 Unless Otherwise Noted

DATE:- March 29, 1993

David T Lash

DRAWING:- D77 OF 85 SHEET:- 82 OF 131

PROJECT:- ST/206-6( ) STATION:-

BRIDGE CONTRACT NO. B-20757

BRIDGE FILE:- 23-71-4994B

DAVID T. LASH REGISTERED No. 20470 STATE OF INDIANA PROFESSIONAL ENGINEER

DESIGNED	AMW	C'K'D	PEB
DRAWN	AMW	C'K'D	PEB
TRACED		C'K'D	

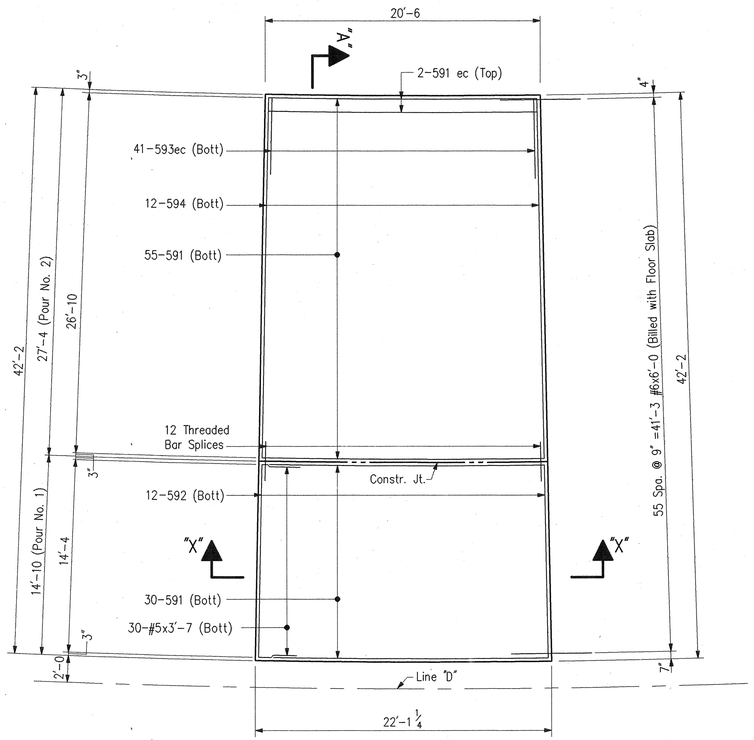

PLAN - SOUTH APPROACH SOUTHBOUND LANES

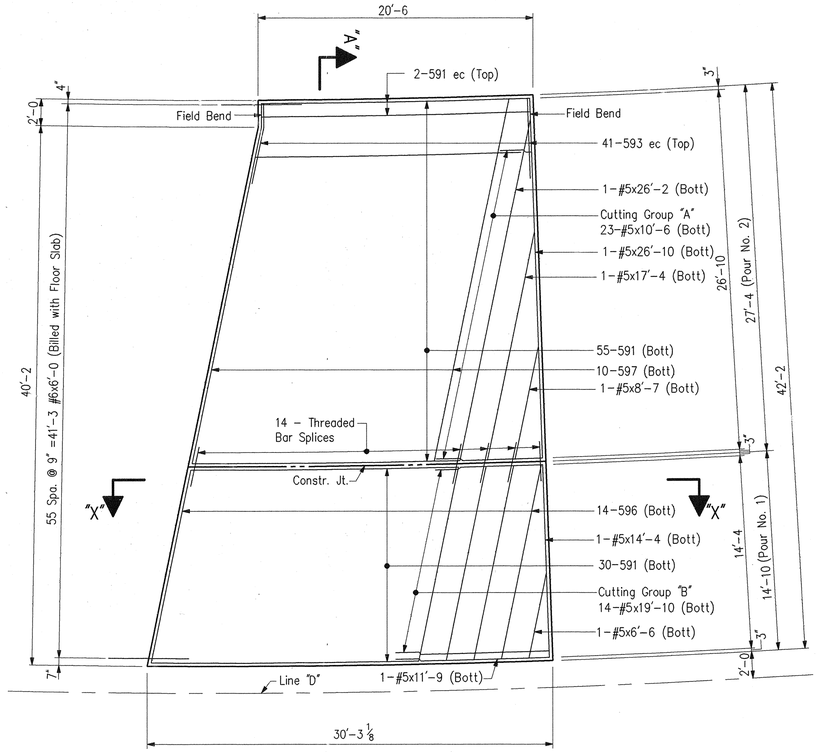

PLAN - NORTH APPROACH SOUTHBOUND LANES

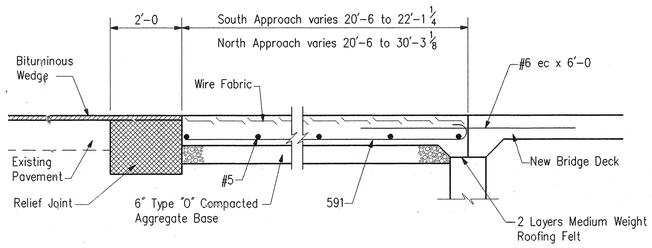

SECTION X-X

Scale: 1/2" = 1'-0

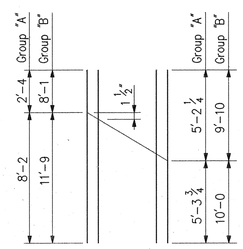

CUTTING GROUPS

"A" - 23-#5x10'-6

"B" - 14-#5x19'-10

NOTES

- For reinforcing bar notes and bar bending details, see Bridge Standard C-1.
- ec Indicates epoxy coated reinforcing steel.
- Reinforcing Steel to be grade 60 reinforcing.
- Min. Lap for #5 Bar is 1'-9.
- Removal of existing curb on approach slabs to be included in cost of Pavement Removal.
- For Section A, see Dwg. D76.

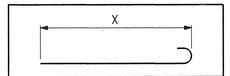

MARK	X	LENGTH
591	20'-0	20'-7
592	14'-4	14'-11
593	6'-0	6'-7
594	23'-6	24'-1
596	14'-7	15'-2
597	27'-6	28'-1

BILL OF MATERIALS
SOUTH APPROACH SOUTHBOUND LANES
REINFORCING STEEL

SIZE & MARK	No. OF BARS	LENGTH	WEIGHT (LBS.)
EPOXY COATED REINFORCING			
593	41	6'-7"	
591	2	20'-7"	
TOTAL #5 BARS			325
TOTAL EPOXY REINF.			325
PLAIN REINFORCING			
594	12	17'-7"	
592	12	14'-11"	
591	85	20'-7"	
#5	12	9'-4"	
#5	30	3'-7"	
TOTAL #5 BARS			2461
TOTAL PLAIN REINF.			2461

CONCRETE

10" Reinforced Concrete Pavement		
Pour No. 1	36 Sys.	
Pour No. 3	64 Sys.	
Total 10" Reinforced Concrete Pavement		100 Sys.

MISCELLANEOUS

Threaded Bar Splices	12 Each
Type "0" Compacted Aggregate Base	33 Tons
* Pavement Remove	93 Sys.

* Includes Removal of Integral Concrete Curb.

BILL OF MATERIALS
NORTH APPROACH SOUTHBOUND LANES
REINFORCING STEEL

SIZE & MARK	No. OF BARS	LENGTH	WEIGHT (LBS.)
EPOXY COATED REINFORCING			
593	41	6'-7"	
591	2	20'-7"	
TOTAL #5 BARS			325
TOTAL EPOXY REINF.			325
PLAIN REINFORCING			
597	10	28'-1"	
596	14	15'-2"	
591	85	20'-7"	
#5	1	26'-10"	
#5	1	26'-2"	
#5	14	19'-10"	
#5	1	17'-4"	
#5	1	14'-4"	
#5	1	11'-9"	
#5	23	10'-6"	
#5	1	8'-7"	
#5	1	6'-6"	
TOTAL #5 BARS			2997
TOTAL PLAIN REINF.			2997

CONCRETE

10" Reinforced Concrete Pavement		
Pour No. 1	47 Sys.	
Pour No. 2	71 Sys.	
Total 10" Reinforced Concrete Pavement		118 Sys.

MISCELLANEOUS

Threaded Bar Splices	14 Each
Type "0" Compacted Aggregate Base	39 Tons
** Pavement Remove	123 Sys.

** Includes Removal for Relief Joint and Removal of Integral Concrete Curb.

R.C. APPROACH SLAB DETAILS - SOUTHBOUND

INDIANA DEPARTMENT OF TRANSPORTATION

ST. JOSEPH COUNTY

SCALE:- 3/16"=1'-0 Unless Otherwise Noted

DATE:- March 29, 1993

David T. Lash

DAVID T. LASH REGISTERED No. 20470 STATE OF INDIANA PROFESSIONAL ENGINEER

DRAWING: 070 OF 65 SHEET:- 83 OF 131

PROJECT:- ST/206-6( ) STATION:-

BRIDGE CONTRACT NO. B-20757

BRIDGE FILE:- 23-71-4994P

DESIGNED	AMW	C'K'D	PEB
DRAWN	AMW	C'K'D	PEB
TRACED		C'K'D	

CONNECTION TYPES

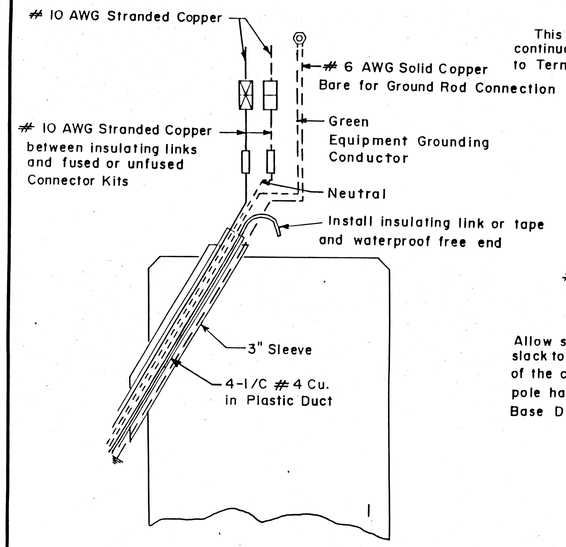

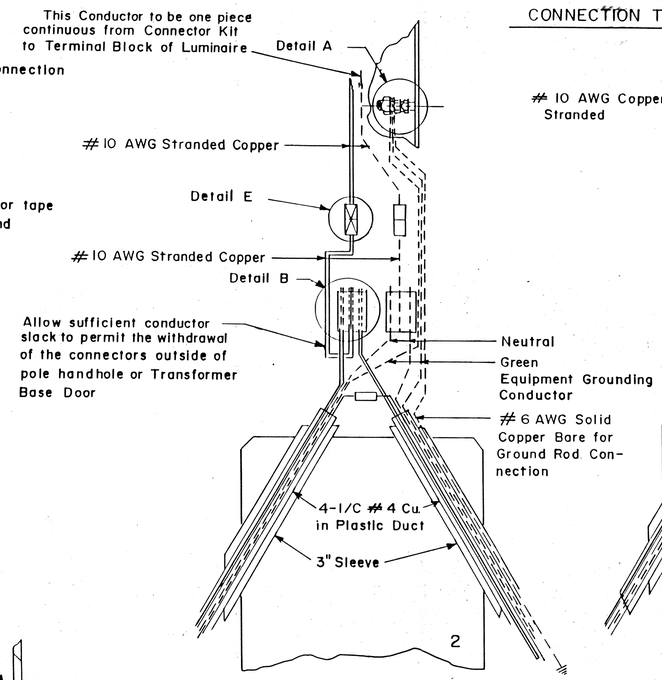

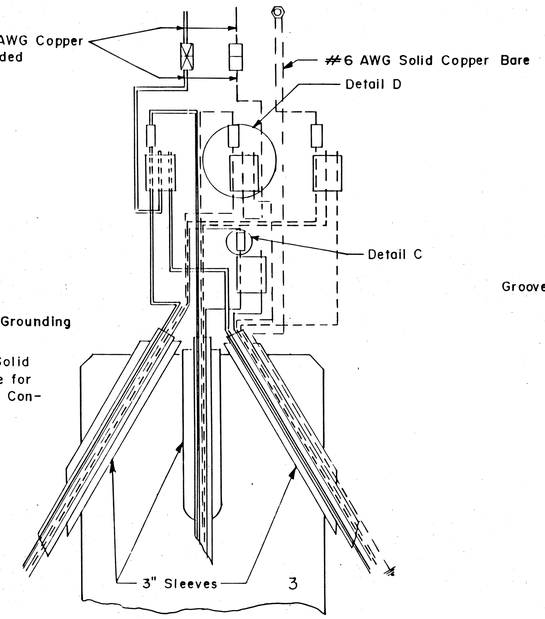

SIDE CONNECTION

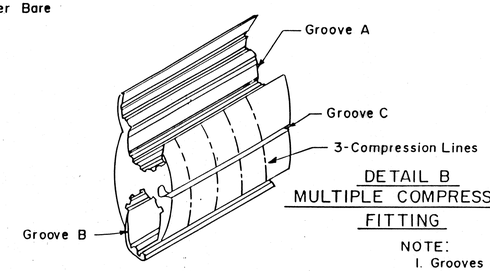

DETAIL B
MULTIPLE COMPRESSION FITTING

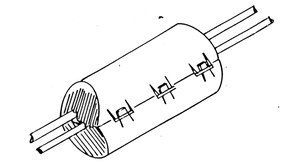

MULTIPLE COMPRESSION FITTING COVER

NOTE:
1. Grooves A & B to receive 1 #4 CU. Conductor.
2. Groove C to receive 1 #10 CU. Conductor.
3. Use of Inhibiting Compound is mandatory for all connections.
4. Manufacturer to be Homac, Blackburn, Burndy or Equal.
5. Multiple compression fitting shall be covered with snap-on fiber or plastic covers, taping shall not be permitted.

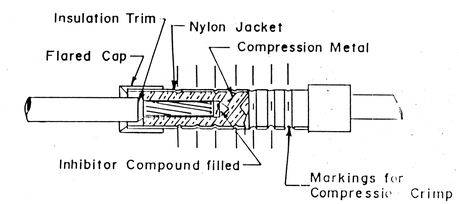

DETAIL C
INSULATING LINK

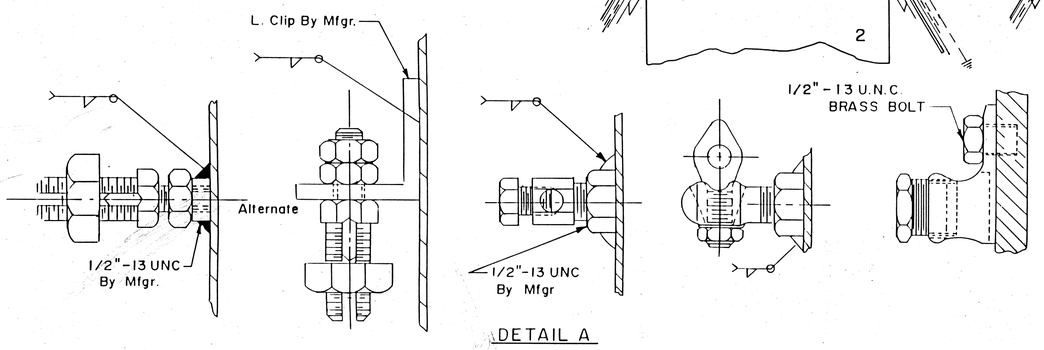

DETAIL A
ALTERNATIVE GROUNDING POSTS

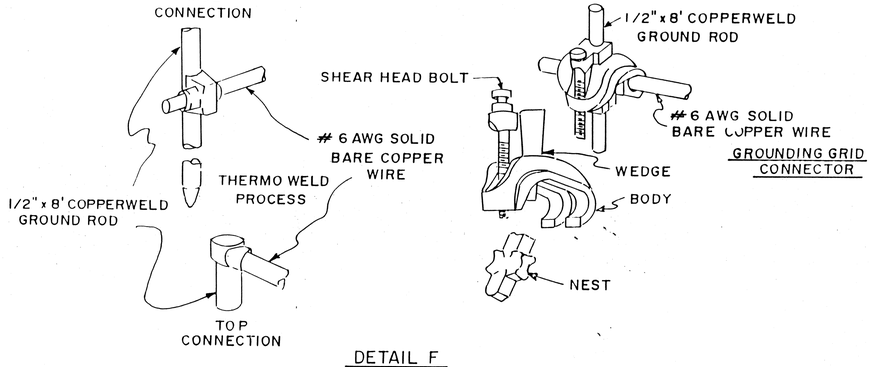

GROUNDING GRID CONNECTOR

DETAIL F
TYPICAL GROUND ROD CONNECTION

LEGEND

- Grounding Post
- Self Insulated Splicer (Insulating Link)
- Unfused Connector
- Fused Connector
- Compression Connector

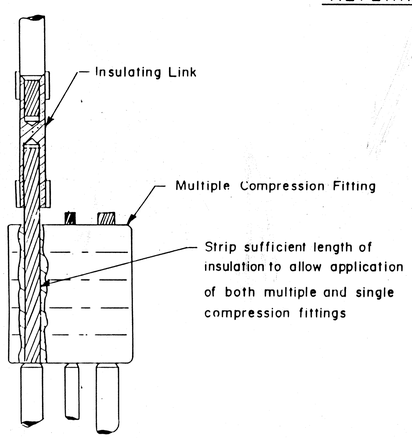

DETAIL D

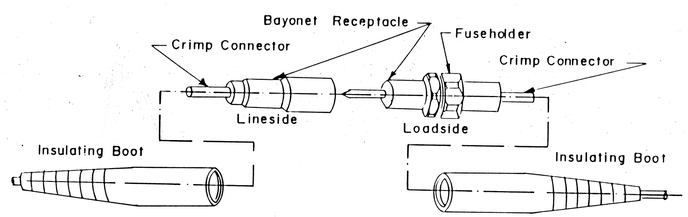

DETAIL E
BAYONET DISCONNECT CONNECTOR KIT

NOTES

1. ALLOW SUFFICIENT CONDUCTOR SLACK TO PERMIT THE WITHDRAWAL OF THE CONNECTORS OUTSIDE OF POLE HANDHOLE.
2. OXIDATION INHIBITOR SHALL BE APPLIED TO ALL SURFACES THAT MATE WITH A DISSIMILAR MATERIAL.

LIGHT CONNECTION DETAILS

DESIGNED BY: _____ DATE: _____

INDIANA DEPARTMENT OF TRANSPORTATION
DIVISION OF DESIGN

DESIGN ENGINEER DATE

CONTRACT NO. B-20757

SCALE:

DES. NO.	PROJECT NO.	YEAR	SHEET	TOTAL
	ST/206-6( )	87	131	

Dwg. D82 of 85

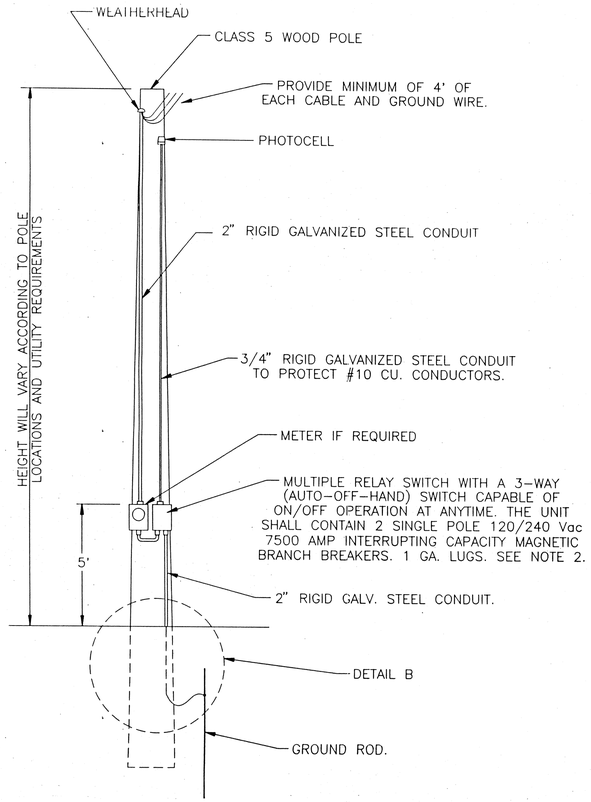

SERVICE POINT
TYPE I

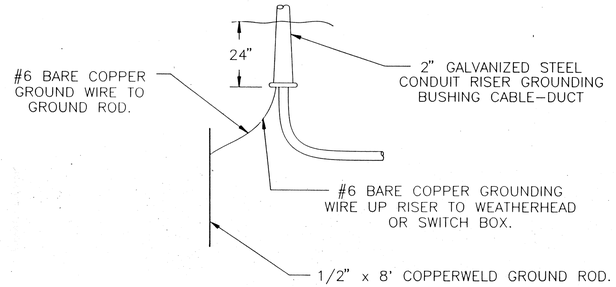

TYPICAL ENTRY INTO RISER
(POLE AND STRUCTURE)

DETAIL B

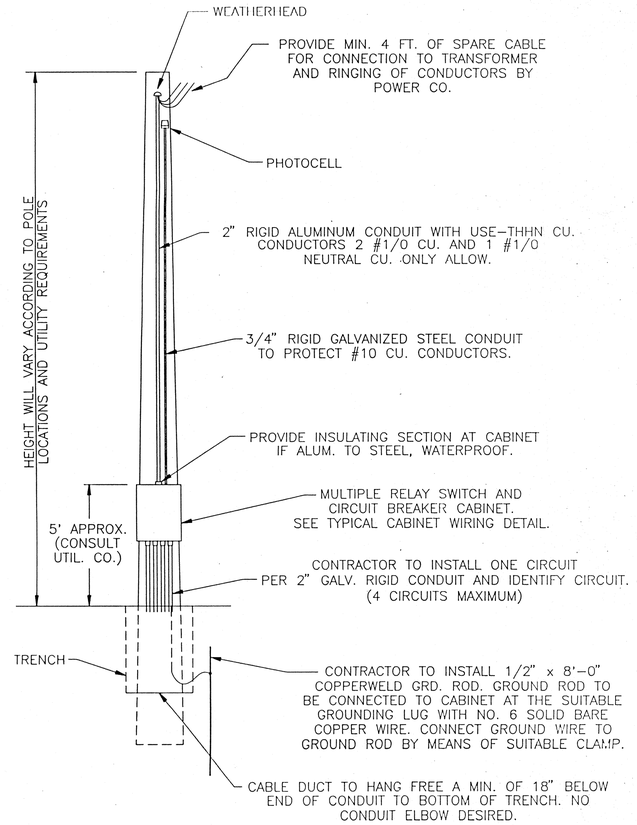

SERVICE POINT
TYPE II

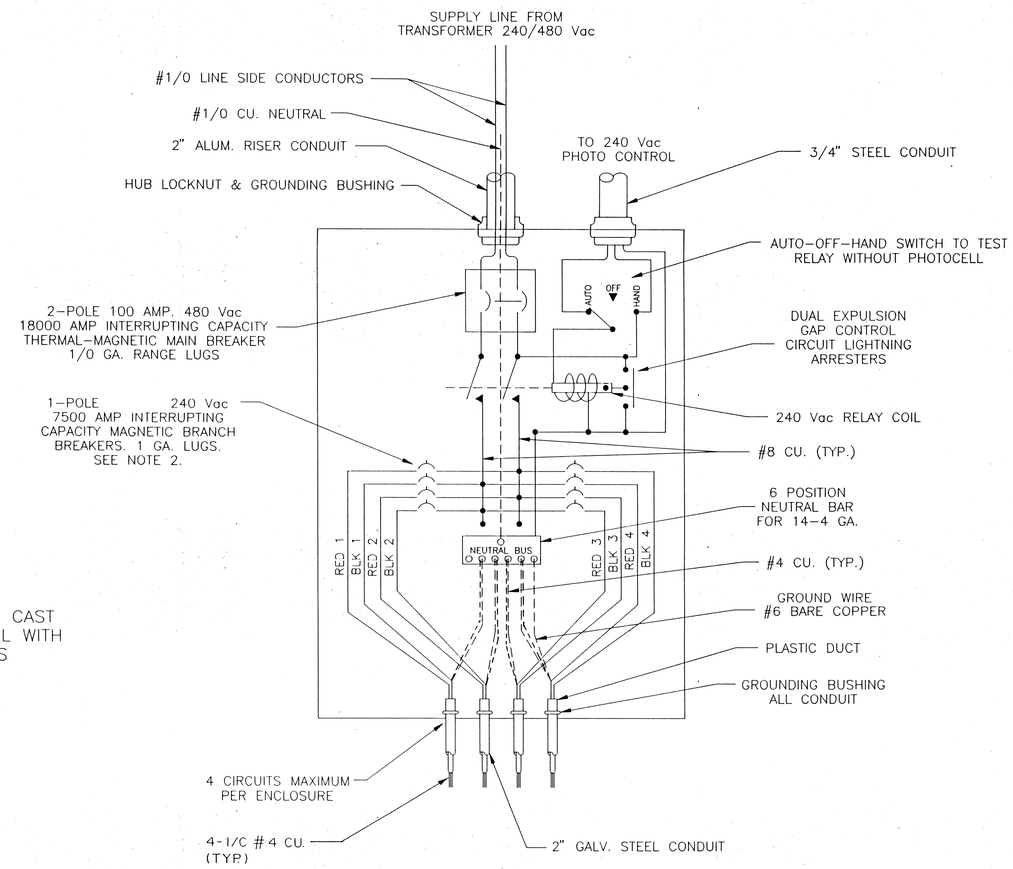

TYPICAL CABINET WIRING
100 AMP SERVICE

NOTES:
1. CABINET & HARDWARE SHALL BE WEATHERPROOF, RAIN TIGHT, CAST ALUMINUM OR 14 GA. ALUMINUM OR 16 GA. STAINLESS STEEL WITH PROVISIONS FOR PADLOCKING WITH PLATED BRASS, STAINLESS STEEL OR ALUMINUM FASTENER AND MOUNTING HARDWARE.
2. E SERIES MAGNETIC CIRCUIT BREAKERS SHALL HAVE THE FOLLOWING FEATURES:
   A) CAPABLE OF 10,000 ON-OFF OPERATIONS.
   B) 7500 AMPERE INTERRUPTING CAPACITY.
   C) TEMPERATURE STABLE AS NOT TO BE ADVERSELY AFFECTED BY TEMPERATURE CHANGES OVER THEIR OPERATING ENVIRONMENT OF -40°C TO +85°C.
   D) LUG RANGE 1/0-14 COPPER AND 1/0-12 ALUMINUM.
   E) WILL TRIP ON OVERLOAD, EVEN WHEN HANDLE IS FORCIBLY HELD IN ON POSITION.

LIGHT SERVICE POINT DETAILS

DESIGNED BY: _____ DATE: _____

INDIANA DEPARTMENT OF TRANSPORTATION
DIVISION OF DESIGN

DESIGN ENGINEER DATE

CONTRACT NO. B-20757

SCALE:

DES. NO.	PROJECT NO.	YEAR	SHEET	TOTAL
	ST/206-6( )		88	131

NOTE:
ANGLE CLIP, ANGLE SUPPORT, AND BRIDGE GIRDERS AROUND WELDS TO BE PAINTED ACCORDING TO BRIDGE SPECIFICATIONS.

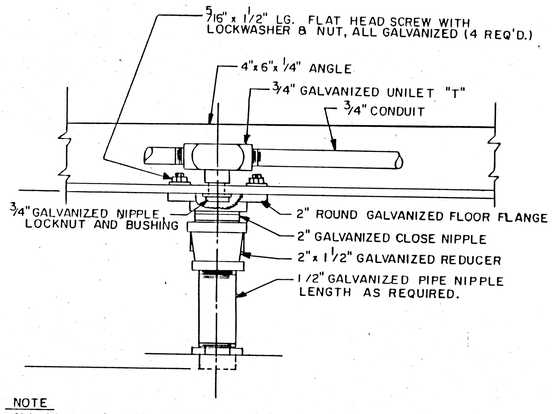

NOTE
ALL PARTS OF PIPE ASSEMBLY SHALL BE HOT DIP GALVANIZED AFTER THREADS ARE CUT.
ALSO APPLY SILICON CAULKING COMPOUND TO THREADS DURING ASSEMBLY.

SCALE: 3"=1'-0"

UNDERPASS LUMINAIRE PENDANT HANGER DETAIL

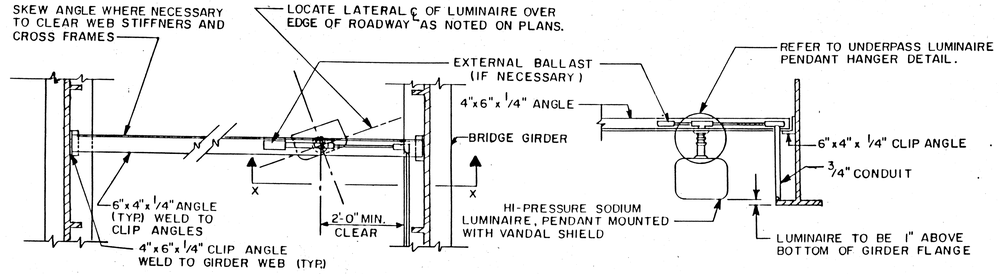

PLAN VIEW

SECTION X-X

TYPICAL UNDERPASS LUMINAIRE MOUNTING DETAIL

PENDANT MOUNTING

SCALE: 1/2"=1'-0"

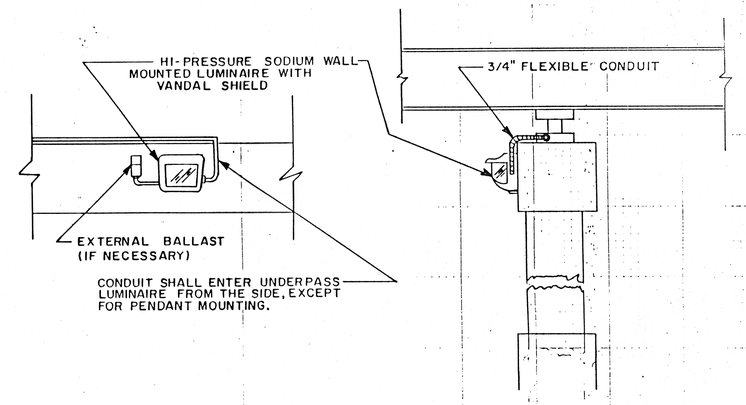

TYPICAL UNDERPASS LUMINAIRE MOUNTING DETAIL

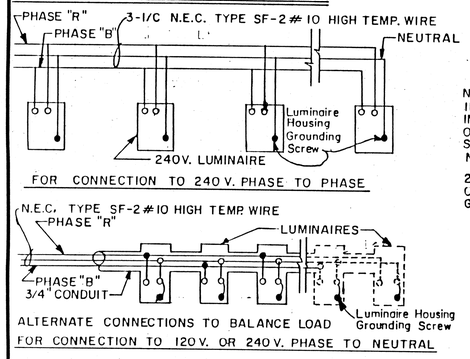

LUMINAIRE WIRING DETAIL

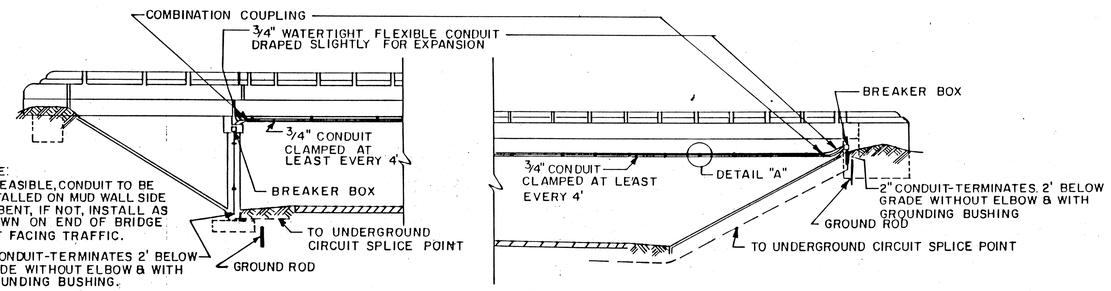

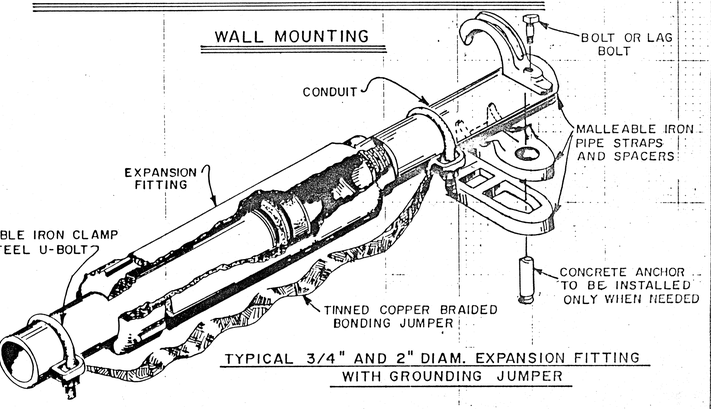

TYPICAL 3/4" AND 2" DIAM. EXPANSION FITTING WITH GROUNDING JUMPER

NOTE:
1. MALLEABLE IRON PIPE STRAPS TO BE INSTALLED IMMEDIATELY BEFORE AND AFTER THE INSTALLED EXPANSION FITTING, TO SUPPORT EXPANSION FITTING AND CONDUIT.
2. SPACERS SHALL BE PROVIDED UNDERNEATH THE PIPE STRAP TO ALLOW PROPER CLEARANCE BETWEEN THE BRIDGE STRUCTURE AND THE FITTING.

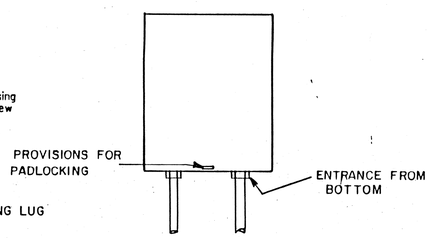

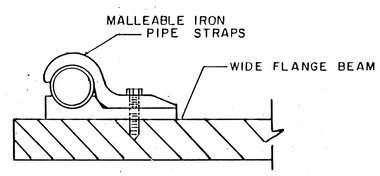

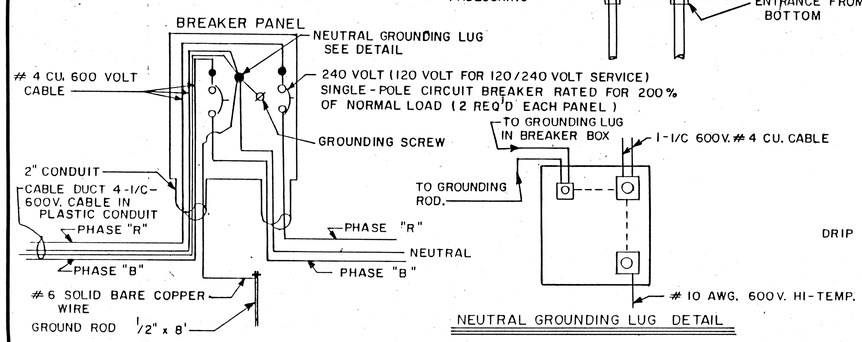

CIRCUIT BREAKER WIRING DETAIL

NEUTRAL GROUNDING LUG DETAIL

DETAIL "A"

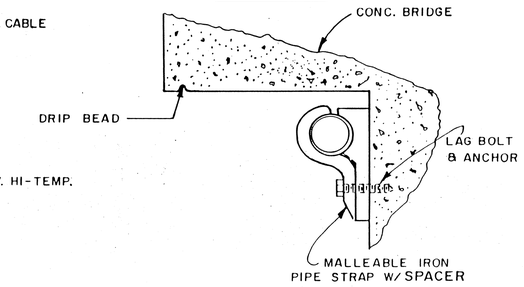

NOTE:
1. ALL FLEXIBLE CONDUIT SHALL BE GALVANIZED STEEL, POLYVINYL JACKETED AND LIQUID-TIGHT.
2. GROUNDING JUMPER SHALL NOT BE WRAPPED AROUND FLEXIBLE CONDUIT, INSTEAD SLIGHTLY DRAPED ON ONE SIDE.

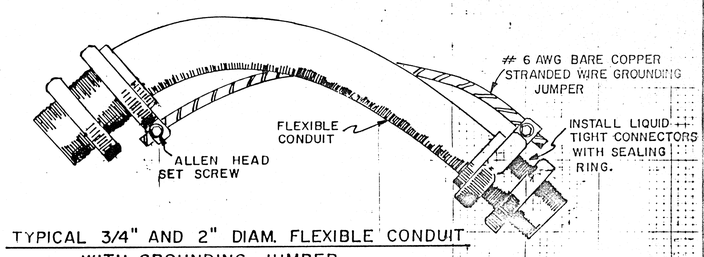

TYPICAL 3/4" AND 2" DIAM. FLEXIBLE CONDUIT WITH GROUNDING JUMPER

NOTES:
1. Oxidation inhibitor shall be liberally applied to all surfaces that mate with a dissimilar material.
2. All luminaire wiring from Breaker Panel, the last luminaire shall be # 10 AWG Stranded Cu., 600 V., SF-2, with a 200°C. rating and a Glass Braid Covering.
3. Where sign illumination and underpass illumination are to be installed on the same structure both sign and underpass luminaires may be connected to the same circuit.
4. Circuit breaker panel to be housed in a N.E.M.A. 4/5 stainless steel enclosure with provisions for padlocking. The Connector between the conduit and enclosure shall be waterproof.

UNDERPASS LIGHTING DETAILS

DESIGNED BY: _____ DATE: _____

INDIANA DEPARTMENT OF TRANSPORTATION
DIVISION OF DESIGN

DESIGN ENGINEER DATE

CONTRACT NO. B-20757

SCALE

DES. NO.	PROJECT NO.	YEAR	SHEET	TOTAL
	ST/206-6( )		89	131

Dwg D84 of 85

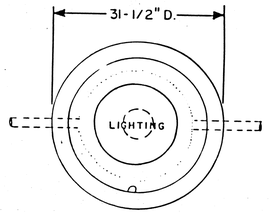

NOTE: 1. AN ALTERNATE HANDHOLE MAY BE SUBSTITUTED FOR A STREET AND ALLEY HANDHOLE PROVIDED IT MEETS THE LATEST STANDARD SPECIFICATIONS. THE ALTERNATE HANDHOLE SHALL BE MADE FROM POLYMER CONCRETE WITH FIBER REINFORCED POLYESTER MATERIAL. THE MINIMUM SIZE SHALL BE 17"x 30" IN 22-INCH DEPTH WITH 2" LID THICKNESS.

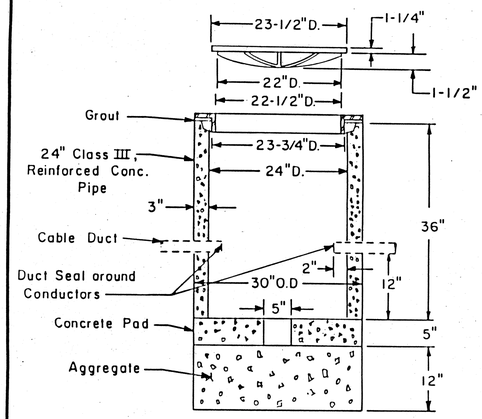

STREET & ALLEY TYPE HANDHOLE

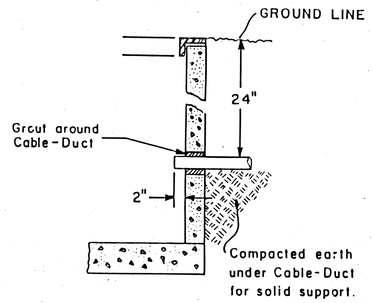

CABLE DUCT ENTERING HANDHOLE

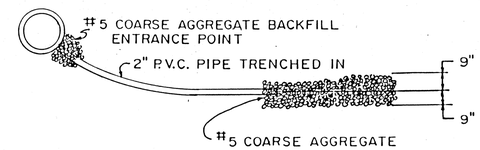

PLAN VIEW

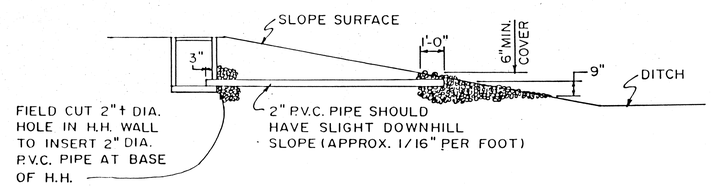

X-SECTION

HANDHOLE DRAIN DETAIL

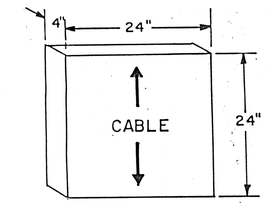

CABLE MARKER

NOTE:
CLASS "A" CONCRETE PLACE OVER CABLE-DUCT. ARROWS ARE TO SHOW DIRECTION OF CABLE RUNS. THE WORD "CABLE" SHALL BE IMPRESSED IN SURFACE WITH A DIE.

NOTE: 1. APPROXIMATE WEIGHT FOR CAST IRON RING AND COVER SHALL BE 320 LBS.
2. ALL HANDHOLES SHALL BE INSTALLED WITH TOP FLUSH WITH ADJOINING SURFACES.
3. PRE-CAST HANDHOLE WITH INTERGRAL BOTTOM IS ACCEPTABLE PROVIDING ALL SPECIFICATIONS ARE MET.

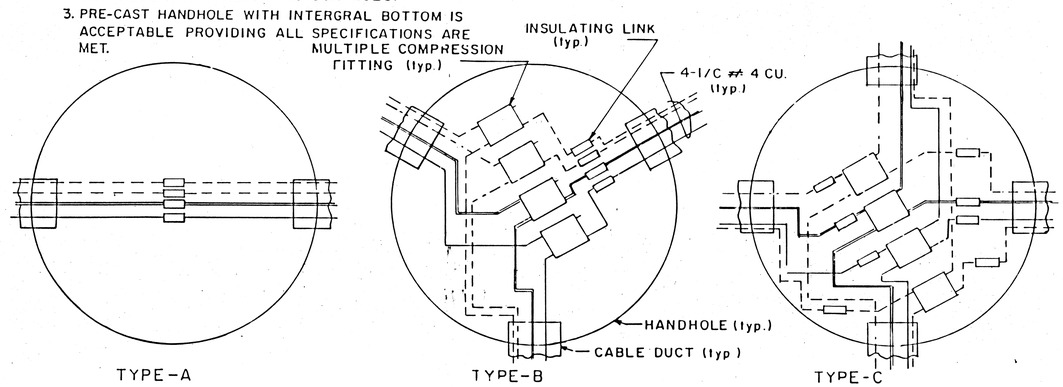

HANDHOLE CONNECTION DIAGRAM

NOTE: 1. MULTIPLE COMPRESSION FITTINGS AND INSULATING LINKS INSTALLED IN HANDHOLES SHALL BE TAPED AND WATERPROOFED BY APPLICATION OF AN APPROVED WATERPROOFING DEVICE
2. CLEAN THE INSULATION AROUND THE WATERPROOF AREA BEFORE APPLYING WATERPROOF DEVICE

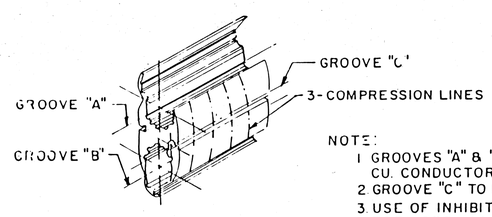

MULTIPLE COMPRESSION FITTING DETAIL

NOTE:
1. GROOVES "A" & "B" TO RECEIVE 1 #4 CU. CONDUCTOR.
2. GROOVE "C" TO RECEIVE 1 #10 CONDUCTOR.
3. USE OF INHIBITING COMPOUND IS MANDATORY FOR ALL CONNECTIONS.
4. MFGR. TO BE HOMAC, BLACKBURN, BURNDY OR EQUAL.
5. MULTIPLE COMPRESSION FITTING SHALL BE COVERED WITH SNAP-ON FIBER OR PLASTIC COVERS. TAPING SHALL NOT BE PERMITTED.

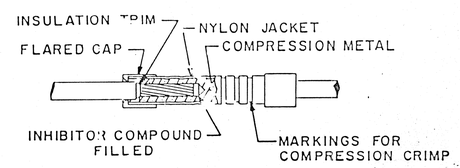

INSULATING LINK DETAIL

LIGHT HANDHOLE DETAILS

DESIGNED BY: _____ DATE: _____

INDIANA DEPARTMENT OF TRANSPORTATION
DIVISION OF DESIGN

DESIGN ENGINEER DATE

CONTRACT NO. B-20757

SCALE:

DES. NO.	PROJECT NO.	YEAR	SHEET	TOTAL
	ST/206-6( )		90	131

Dwg D85 of 85

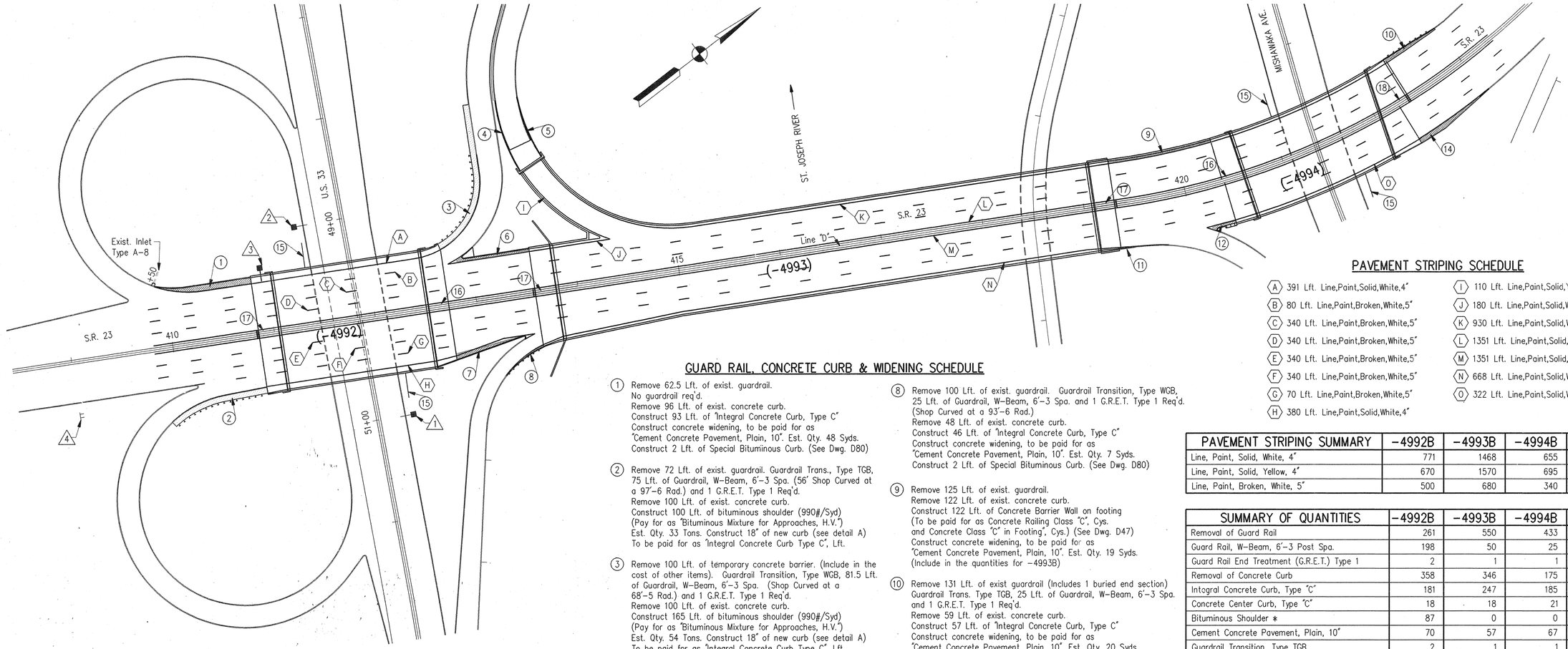

PAVEMENT STRIPING SCHEDULE

- (A) 391 Lft. Line,Paint,Solid,White,4"
- (B) 80 Lft. Line,Paint,Broken,White,5"
- (C) 340 Lft. Line,Paint,Broken,White,5"
- (D) 340 Lft. Line,Paint,Broken,White,5"
- (E) 340 Lft. Line,Paint,Broken,White,5"
- (F) 340 Lft. Line,Paint,Broken,White,5"
- (G) 70 Lft. Line,Paint,Broken,White,5"
- (H) 380 Lft. Line,Paint,Solid,White,4"
- (I) 110 Lft. Line,Paint,Solid,Yellow,4"
- (J) 180 Lft. Line,Paint,Solid,White,4"
- (K) 930 Lft. Line,Paint,Solid,White,4"
- (L) 1351 Lft. Line,Paint,Solid,Yellow,4"
- (M) 1351 Lft. Line,Paint,Solid,Yellow,4"
- (N) 668 Lft. Line,Paint,Solid,White,4"
- (O) 322 Lft. Line,Paint,Solid,White,4"

PAVEMENT STRIPING SUMMARY	-4992B	-4993B	-4994B	TOTAL
Line, Paint, Solid, White, 4"	771	1468	655	2894 Lft.
Line, Paint, Solid, Yellow, 4"	670	1570	695	2935 Lft.
Line, Paint, Broken, White, 5"	500	680	340	1520 Lft.

GUARD RAIL, CONCRETE CURB & WIDENING SCHEDULE

(1) Remove 62.5 Lft. of exist. guardrail.
No guardrail req'd.
Remove 96 Lft. of exist. concrete curb.
Construct 93 Lft. of "Integral Concrete Curb, Type C"
Construct concrete widening, to be paid for as
"Cement Concrete Pavement, Plain, 10". Est. Qty. 48 Syds.
Construct 2 Lft. of Special Bituminous Curb. (See Dwg. D80)

(2) Remove 72 Lft. of exist. guardrail. Guardrail Trans., Type TGB, 75 Lft. of Guardrail, W-Beam, 6'-3 Spa. (56' Shop Curved at a 97'-6 Rad.) and 1 G.R.E.T. Type 1 Req'd.
Remove 100 Lft. of exist. concrete curb.
Construct 100 Lft. of bituminous shoulder (990#/Syd)
(Pay for as "Bituminous Mixture for Approaches, H.V.")
Est. Qty. 33 Tons. Construct 18" of new curb (see detail A)
To be paid for as "Integral Concrete Curb Type C", Lft.

(3) Remove 100 Lft. of temporary concrete barrier. (Include in the cost of other items). Guardrail Transition, Type WGB, 81.5 Lft. of Guardrail, W-Beam, 6'-3 Spa. (Shop Curved at a 68'-5 Rad.) and 1 G.R.E.T. Type 1 Req'd.
Remove 100 Lft. of exist. concrete curb.
Construct 165 Lft. of bituminous shoulder (990#/Syd)
(Pay for as "Bituminous Mixture for Approaches, H.V.")
Est. Qty. 54 Tons. Construct 18" of new curb (see detail A)
To be paid for as "Integral Concrete Curb Type C", Lft.

(4) Remove 50 Lft. of exist. concrete curb.
Construct 48' of "Integral Concrete Curb, Type C"
Construct concrete widening, to be paid for as
"Cement Concrete Pavement, Plain, 70". Est. Qty. 7 Syds.
Construct 2 Lft. of Special Bituminous Curb. (See Dwg. D80)

(5) Remove 225 Lft. of exist. guardrail.
No guardrail req'd.
Remove 45 Lft. of exist. concrete curb.
Construct 45 Lft. of "Integral Concrete Curb, Type C"
Construct concrete widening, to be paid for as
"Cement Concrete Pavement, Plain, 10". Est. Qty. 6 Syds.
Construct 2 Lft. of Special Bituminous Curb. (See Dwg. D80)

(6) Remove 71 Lft. of exist. concrete curb.
Construct 58' of "Integral Concrete Curb, Type C"
Construct concrete center curb, to be paid for as
"Special Center Curb", (see detail on Dwg. D80)
Construct concrete widening, to be paid for as
"Cement Concrete Pavement, Plain, 10". Est. Qty. 18 Syds.
Construct 2 Lft. of Special Bituminous Curb. (See Dwg. D80)
(Include in the quantities for -4993B)

(7) Remove 50 Lft. of exist. guardrail.
No guardrail req'd.
Remove 62 Lft. of exist. concrete curb.
Construct 62 Lft. of "Integral Concrete Curb, Type C"
Construct concrete center curb, to be paid for as
"Special Center Curb", (see detail on Dwg. D80)
Construct concrete widening, to be paid for as
"Cement Concrete Pavement, Plain, 10". Est. Qty. 22 Syds.
(Include in the quantities for -4992B)

(8) Remove 100 Lft. of exist. guardrail. Guardrail Transition, Type WGB, 25 Lft. of Guardrail, W-Beam, 6'-3 Spa. and 1 G.R.E.T. Type 1 Req'd. (Shop Curved at a 93'-6 Rad.)
Remove 48 Lft. of exist. concrete curb.
Construct 46 Lft. of "Integral Concrete Curb, Type C"
Construct concrete widening, to be paid for as
"Cement Concrete Pavement, Plain, 10". Est. Qty. 7 Syds.
Construct 2 Lft. of Special Bituminous Curb. (See Dwg. D80)

(9) Remove 125 Lft. of exist. guardrail.
Remove 122 Lft. of exist. concrete curb.
Construct 122 Lft. of Concrete Barrier Wall on footing
(To be paid for as Concrete Railing Class "C", Cys.
and Concrete Class "C" in Footing", Cys.) (See Dwg. D47)
Construct concrete widening, to be paid for as
"Cement Concrete Pavement, Plain, 10". Est. Qty. 19 Syds.
(Include in the quantities for -4993B)

(10) Remove 131 Lft. of exist guardrail (Includes 1 buried end section)
Guardrail Trans. Type TGB, 25 Lft. of Guardrail, W-Beam, 6'-3 Spa. and 1 G.R.E.T. Type 1 Req'd.
Remove 59 Lft. of exist. concrete curb.
Construct 57 Lft. of "Integral Concrete Curb, Type C"
Construct concrete widening, to be paid for as
"Cement Concrete Pavement, Plain, 10". Est. Qty. 20 Syds.
Construct 2 Lft. of Special Bituminous Curb. (See Dwg. D80)

(11) Remove 100 Lft. of exist. guardrail.
Guardrail Transition Type TGB, 25 Lft. Guardrail
6'-3 Spacing Req'd.
Remove 10 Lft. of exist. concrete curb.
Construct 10 Lft. of "Integral Concrete Curb, Type C"
Construct 2 Lft. of Special Bituminous Curb. (See Dwg. D80)

(12) Remove 51 Lft. of exist. guardrail (Includes 1 buried end section)
Remove 32 Lft. of exist. concrete curb.
Construct 16 Lft. of "Integral Concrete Curb, Type C"
Install a 3-Bay G.R.E.A.T.
Construct concrete widening, to be paid for as
"Cement Concrete Pavement, Plain, 10". Est. Qty. 10 Syds.

(14) Remove 175 Lft. of exist. guardrail.
No guardrail req'd.
Remove 84 Lft. of exist. concrete curb.
Construct 82 Lft. of "Integral Concrete Curb, Type C"
Construct concrete widening, to be paid for as
"Cement Concrete Pavement, Plain, 10". Est. Qty. 37 Syds.
Construct 2 Lft. of Special Bituminous Curb. (See Dwg. D80)

(15) Remove 38' of exist. guardrail (Pier protection)
No guardrail req'd.

(16) Remove 9 Sys. of "Concrete Center Curb.
Construct 9 Sys. of "Concrete Center Curb, Type "C".
(See Rd. Std. ME)

(17) Remove 10 Sys. of "Concrete Center Curb.
Construct 10 Sys, of "Concrete Center Curb, Type "C",
(See Rd. Std. ME) and 1 Syd. of "Special Bituminous Center Curb"

(18) Remove 13 Sys. of "Concrete Center Curb.
Construct 13 Sys, of "Concrete Center Curb, Type "C",
(See Rd. Std. ME) and 1 Syd. of "Special Bituminous Center Curb"

SUMMARY OF QUANTITIES	-4992B	-4993B	-4994B	TOTAL
Removal of Guard Rail	261	550	433	1244 Lft.
Guard Rail, W-Beam, 6'-3 Post Spa.	198	50	25	273 Lft.
Guard Rail End Treatment (G.R.E.T.) Type 1	2	1	1	4 Ea.
Removal of Concrete Curb	358	346	175	879 Lft.
Integral Concrete Curb, Type "C"	181	247	185	613 Lft.
Concrete Center Curb, Type "C"	18	18	21	57 Sys.
Bituminous Shoulder *	87	0	0	87 Tons.
Cement Concrete Pavement, Plain, 10"	70	57	67	194 Sys.
Guardrail Transition, Type TGB	2	1	1	4 Ea.
Guardrail Transition, Type WGB	1	1	0	2 Ea.
3 Bay G.R.E.A.T	0	0	1	1 Ea.
Type O Compacted Aggregate for Base	25	21	26	72 Tons
Special Concrete Center Curb	8	8	0	16 Sys.
Special Bituminous Center Curb	1	2	1	4 Sys.
Special Bituminous Curb	2	10	4	16 Lft.
Concrete Center Curb, Remove	19	19	22	60 Sys.
Overhead Sign Structure, Boxtruss, Remove	1	0	0	1 Ea.
Breidge Bracket Assembly, Remove	2	0	0	2 Ea.
Concrete	22.81	0	0	22.81 Cys.
Reinforcing Steel	1893.1	0	0	1893.1 Lbs.
Structural Steel, Breakaway	396.54	0	0	396.54 Lbs.
Overhead Sign Structure (Cantilever Double Arm)	3	0	0	3 Ea.
Walkway, Handrail and Lighting Support Assembly	47	0	0	47 Lft.
Sign, Underpass and Roadway Lighting I.D.	3	0	0	3 Ea.

* To be paid for as "Bituminous Mixture for Approaches, HV. See Dwg. D1.

SIGNING SCHEDULE

(1) GDO-1
Remove exist. bridge bracket
mounted on east coping (-4992)
Remount exist. sign on new
cantilever at sta. 51+00 N.B. U.S. 33

(2) GDO-2
Remove exist. bridge bracket
mounted on west coping (-4992)
Remount exist. sign on new
cantilever at sta. 49+00 S.B. U.S. 33

(3) GDO-3
Remove exist. box truss sta. 410+93
Install new cantilever at sta. 410+95 S.B.
Remount 1 exist. S.B. sign on new cantilever.
Mount exist. N.B. sign on new posts at
sta. 409+00 N.B. S.R. 23

(4) GDO-4
Remove exist. box truss sta. 410+93
Mount exist. N.B. sign on new posts at
sta. 409+00 N.B. S.R. 23

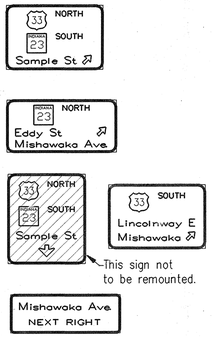

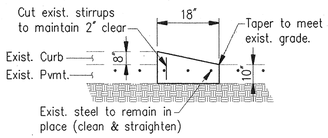

DETAIL "A"
No Scale

MISCELLANEOUS DETAILS

INDIANA DEPARTMENT OF TRANSPORTATION

ST. JOSEPH COUNTY

SCALE:- 1"=50' Unless Otherwise Noted

DATE:- March 29, 1993

David T. Lash

DRAWING:- D79 OF 80 SHEET:- 84 OF 123

PROJECT:- ST/206-6( ) STATION:-

BRIDGE CONTRACT NO. B-20757

BRIDGE FILE:- 23-71-4992B; 23-71-4993B; 23-71-4993

DAVID T. LASH REGISTERED No. 20470 STATE OF INDIANA PROFESSIONAL ENGINEER

DESIGNED	AMW	C'K'D	PEB
DRAWN	AMW	C'K'D	PEB
TRACED		C'K'D	

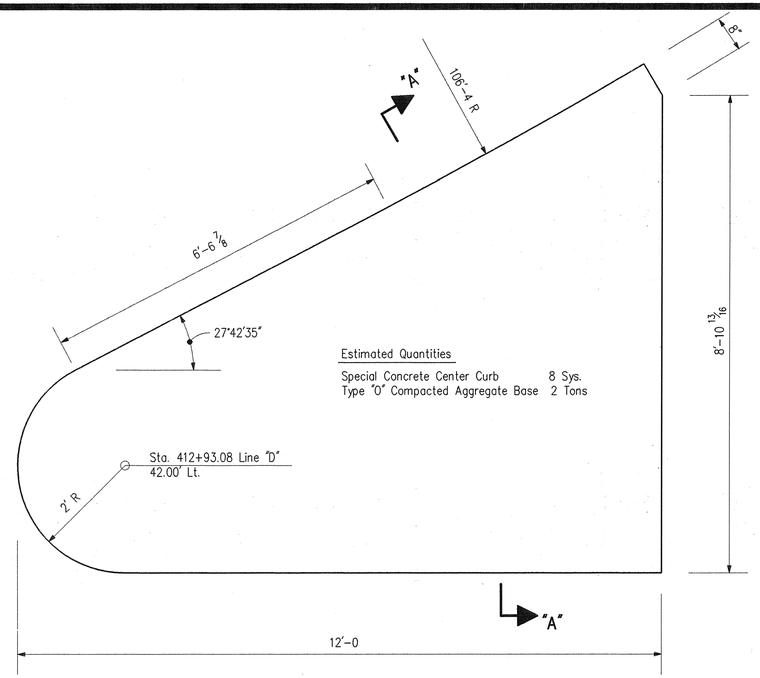

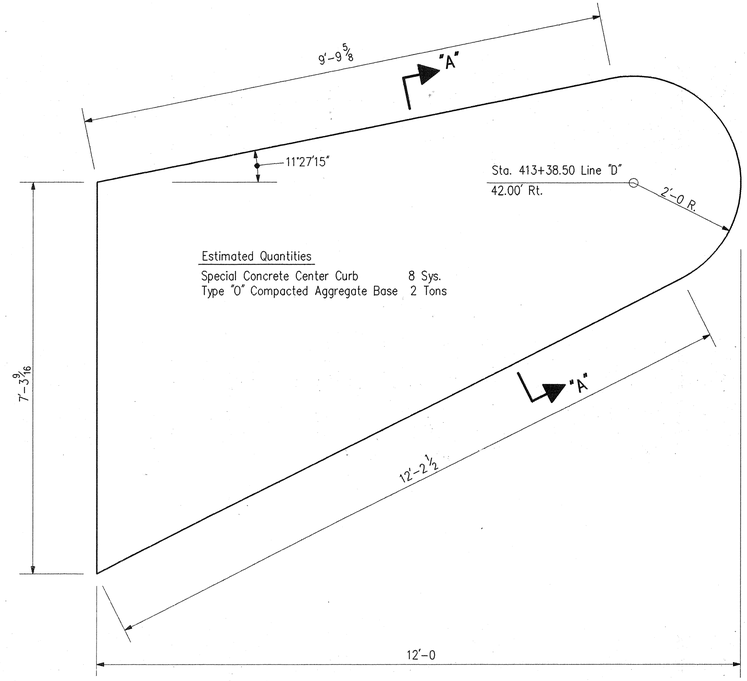

SPECIAL CONCRETE CENTER CURBS

(-4992B)

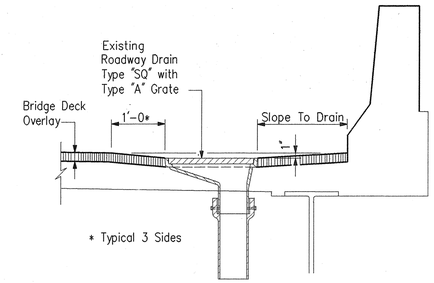

TREATMENT OF OVERLAY AT EXISTING ROADWAY DRAIN

(-4993B)

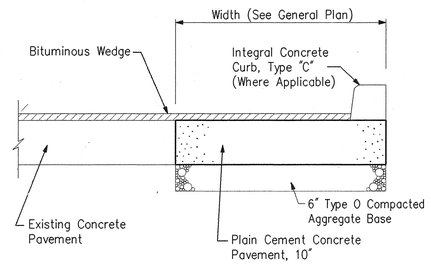

WIDENED CONCRETE PAVEMENT

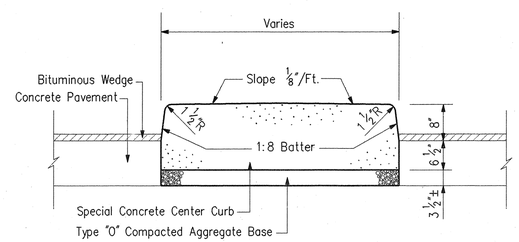

SECTION "A-A"

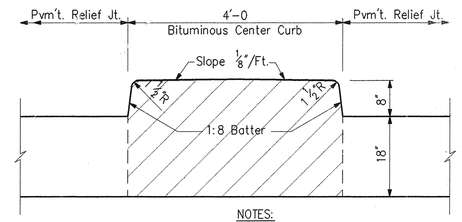

NOTES:
- Bituminous Mixture shall conform to Section 403.04(b)4 of the Specifications
- Special Bituminous Center Curb will be paid for at the contract unit price per Syd complete in place.

SPECIAL BITUMINOUS CENTER CURB

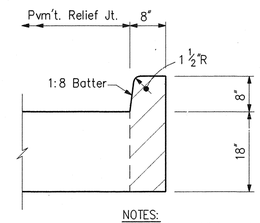

NOTES:
- Bituminous Mixture shall conform to Section 403.04(b)4 of the Specifications
- Special Bituminous Center Curb will be paid for at the contract unit price per Syd complete in place.

SPECIAL BITUMINOUS CURB

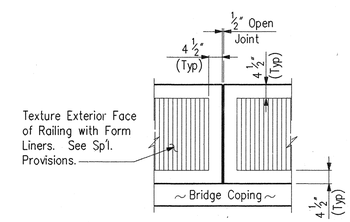

RAILING TEXTURE DETAIL

No Scale

MISCELLANEOUS DETAILS

INDIANA DEPARTMENT OF TRANSPORTATION

ST. JOSEPH COUNTY

SCALE:- 3/4"=1'-0, Unless Noted Otherwise.

DATE:- March 29, 1993

David T. Lash

DRAWING:- D80 OF 85 SHEET:- 85 OF 131

PROJECT:- ST/206-6( ) STATION:-

BRIDGE CONTRACT NO. B-20757

BRIDGE FILE:- 23-71-4992B; 23-71-4993B; 23-71-4994B

DAVID T. LASH REGISTERED No. 20470 STATE OF INDIANA PROFESSIONAL ENGINEER

DESIGNED	PEB	C'K'D
DRAWN	PEB	C'K'D
TRACED		C'K'D

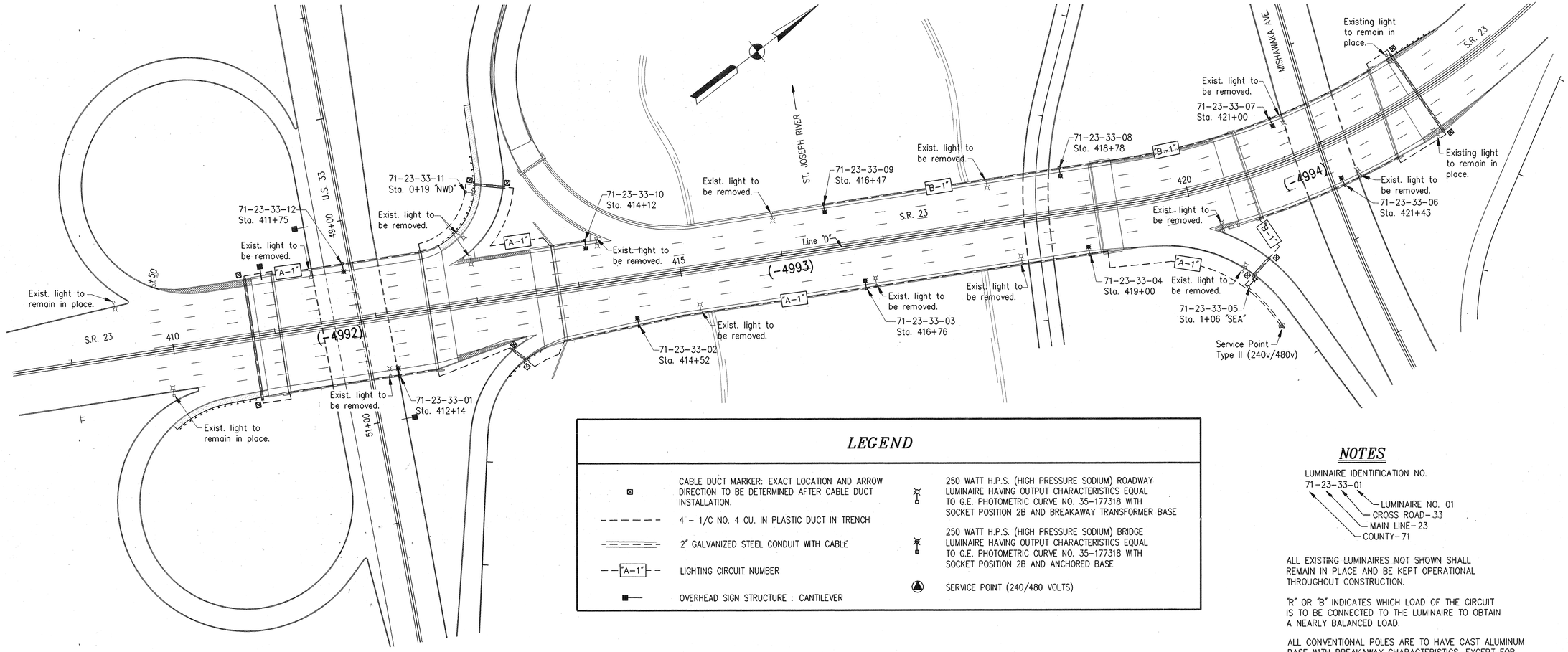

LEGEND

- CABLE DUCT MARKER: EXACT LOCATION AND ARROW DIRECTION TO BE DETERMINED AFTER CABLE DUCT INSTALLATION.
- 4 - 1/C NO. 4 CU. IN PLASTIC DUCT IN TRENCH
- 2" GALVANIZED STEEL CONDUIT WITH CABLE
- "A-1" LIGHTING CIRCUIT NUMBER
- OVERHEAD SIGN STRUCTURE : CANTILEVER
- 250 WATT H.P.S. (HIGH PRESSURE SODIUM) ROADWAY LUMINAIRE HAVING OUTPUT CHARACTERISTICS EQUAL TO G.E. PHOTOMETRIC CURVE NO. 35-177318 WITH SOCKET POSITION 2B AND BREAKAWAY TRANSFORMER BASE
- 250 WATT H.P.S. (HIGH PRESSURE SODIUM) BRIDGE LUMINAIRE HAVING OUTPUT CHARACTERISTICS EQUAL TO G.E. PHOTOMETRIC CURVE NO. 35-177318 WITH SOCKET POSITION 2B AND ANCHORED BASE
- SERVICE POINT (240/480 VOLTS)

NOTES

LUMINAIRE IDENTIFICATION NO.
71-23-33-01
- LUMINAIRE NO. 01
- CROSS ROAD- 33
- MAIN LINE- 23
- COUNTY- 71

ALL EXISTING LUMINAIRES NOT SHOWN SHALL REMAIN IN PLACE AND BE KEPT OPERATIONAL THROUGHOUT CONSTRUCTION.

"R" OR "B" INDICATES WHICH LOAD OF THE CIRCUIT IS TO BE CONNECTED TO THE LUMINAIRE TO OBTAIN A NEARLY BALANCED LOAD.

ALL CONVENTIONAL POLES ARE TO HAVE CAST ALUMINUM BASE WITH BREAKAWAY CHARACTERISTICS, EXCEPT FOR POLES LOCATED ON BRIDGES.

REMOVAL OF EXISTING LIGHTING CIRCUITRY AND RECONNECTION TO EXISTING LIGHTS (IF REQ'D.), TO BE INCLUDED IN THE COST OF OTHER CONTRACT ITEMS.

FOR SIGNING AND PAVEMENT MARKING DETAILS, SEE DWG. D79.

* GALVANIZED LUMINAIRE SUPPORT ARM:

THE CONSTANT CROSS-SECTION LUMINAIRE SUPPORT ARM CAN BE USED IN THIS PROJECT. THE SUPPORT ARM SHALL BE TRUSS TYPE, FABRICATED FROM 2" DIA. STEEL PIPE. THE MATERIAL SHALL CONFORM TO THE FOLLOWING ASTM SPECIFICATIONS:

A-53 Grade B
A-500 Grade B or C
A-501, yield strength min. 35 ksi.

DESIGN DATA TABLE	
INITIAL LAMP LUMEN (LL) FOR 250 WATT (H.P.S.)	27,500 LL
AVG. MAINTAINED ILLUMINATION (Eh)	0.6 FOOTCANDLES
LAMP LUMEN DEPRECIATION FACTOR (LLD)	0.9
LUMINAIRE DIRT DEPRECIATION FACTOR (LDD)	0.87
MAINTENANCE FACTOR (LLD * LDD)	0.78
UNIFORMITY RATIO	3 : 1
MOUNTING HEIGHT (M.H.) CONVENTIONAL	40.0 FEET

SERVICE POINT AMP TABLE	
CIRCUIT	CIRCUIT BREAKER
A-1 RED	15 AMP
A-1 BLACK	15 AMP
B-1 RED	15 AMP
B-1 BLACK	15 AMP

LUMINAIRE NO. 71-23-33-		01	02	03	04	05	06	07	08	09	10	11	12
CONNECTION TYPE		2	2	2	2	2	2	2	2	1	1	2	2
CIRCUIT CONNECTION		B	R	B	R	B	R	B	R	B	R	B	R
POLE SET BACK FROM E.P.		-	-	-	-	15	-	-	-	-	-	15	-
MAST ARM LENGTH		8	8	8	8	10	8	8	8	8	8	10	8
TOP FOUNDATION ELEVATION WITH RESPECT TO E.P.		+2.75	+2.75	+2.75	+2.75	-2.0	+2.75	+2.75	+2.75	+2.75	+2.75	-2.5	+2.75
SET BACK FROM E.P.	THRU LANE	X	X	X	X		X	X	X	X	X		X
	TAPER												
	RAMP					X						X	
LUMINAIRE E.M.H.		38	38	38	38	42	38	38	38	38	38	42	38

ESTIMATE OF QUANTITIES

CODE NO.	ITEM	UNIT	-4992	-4993	-4994
85996	LIGHT STANDARD AND MASTARM (REMOVE)	EACH	4	6	4
86810	SERVICE POINT, TYPE II	EACH	-	-	1
86615	ROADWAY LUMINAIRE, 250 WATT HIGH PRESSURE SODIUM	EACH	3	6	3
*83696	LIGHT STANDARD, 38 FT. E.M.H. WITH 8 FT. MAST ARM (ANCHOR BASE)	EACH	2	6	2
*85804	LIGHT STANDARD, 42 FT. E.M.H. WITH 10 FT. MAST ARM (BREAK-A-WAY BASE)	EACH	1	-	1
86820	CONCRETE FOUNDATION WITH GROUNDING (30 IN. X 30 IN. X 96 IN.)	EACH	1	-	1
86838	I/C, NO.4 CU., IN CONDUIT (BRIDGE)	EACH	1520	4570	1785
	4-I/C, NO. 4 CU. IN PLASTIC DUCT, IN TRENCH	LFT.	310	265	365
	4-I/C, NO. 4 CU. IN PLASTIC DUCT, IN CONDUIT	LFT.	192	24	140
86890	POLE CIRCUIT CABLE, I/C NO. 10 THW OR TW STRANDED CU.	LFT.	450	900	450
06592	2 IN GALVANIZED STEEL CONDUIT	LFT.	460	930	470
86910	CONNECTOR KIT - UNFUSED THRU	EACH	3	6	3
86915	CONNECTOR KIT - FUSED THRU	EACH	3	6	3
86920	MULTIPLE COMPRESSION FITTING	EACH	6	10	6
86930	INSULATING LINK	EACH	3	6	3
86955	CABLE-DUCT MARKER	EACH	4	2	4
86950	SIGN, UNDERPASS, AND ROADWAY LIGHTING LOCATION IDENTIFICATION	EACH	3	6	3
86835	ROADWAY LIGHTING FOUNDATION GRADING	EACH	1	-	1
06574	SODDING	SYS	40	-	40

DESIGNED AMJ C'K'D
DRAWN AMJ C'K'D
TRACED C'K'D

LIGHTING DETAILS

INDIANA DEPARTMENT OF TRANSPORTATION

ST. JOSEPH COUNTY

SCALE:- 1"=50'

DATE:- March 29, 1993

David T. Lash

DRAWING- D81 OF 85 SHEET- 86 OF 131
PROJECT:- ST/206-6( ) STATION:-
BRIDGE CONTRACT NO. B-20757
BRIDGE FILE:- 23-71-4992,-4993,-4994

DAVID T. LASH REGISTERED No. 20470 STATE OF INDIANA PROFESSIONAL ENGINEER

C:\92100\LIGHTING\SR23LIT2 OPER: AMJ TERM:0165 3/29/1993 17:5:40